Consultant's Guide to Park Design and Development

City of San Diego
Parks and Recreation Department
December 5, 2019

ACKNOWLEDGMENTS

The Consultant's Guide to Park Design and Development is an evolving document. The Parks and Recreation Department would like to thank all the individuals, organizations, and City staff who have contributed to its success.

CITY OF SAN DIEGO PARKS AND RECREATION DEPARTMENT

Andrew Field, Director
Karen Dennison, Interim Assistant Director
Paul Kilburg, Interim Deputy Director, Open Space Division
Mark Marney, Deputy Director, Golf Division
Bruce Martinez, Deputy Director, Community Parks I Division
David Monroe, Deputy Director, Community Parks II Division
Michael Tully, Interim Deputy Director, Developed Regional Parks Division

Consultant's Guide to Park Design and Development

Our Mission

To provide healthy, sustainable, and enriching environments for all.

Our Vision

To connect all to the City's diverse world class park system.

Prepared by:
Administrative Services Division
Parks and Recreation Department
202 C Street, MS 35
San Diego, CA 92101-3860

TABLE OF CONTENTS

	TITLE	Page Number
1.	**INTRODUCTION**	
1.1	Intent	1
1.2	Goals	1
1.3	Application	2
1.4	Types of Parks	2
2.	**PARK DESIGN STANDARDS**	
2.1	General Standards	6
2.2	Site Planning	7
2.3	Plaza Planning and Design	7
2.4	Grading and Drainage	9
2.5	Paving, Walkways and Mow Curbs	10
2.6	Trails	11
2.7	Fencing and Walls	12
2.8	Parking Areas	13
2.9	Trash Enclosures	14
2.10	Site Furniture	14
2.11	Park Identification Signs	16
2.12	Playgrounds and Equipment (Tot Lots)	16
2.13	Outdoor Exercise Areas and Equipment	22
2.14	Prefabricated Picnic Shelters/Shade Shelters	25
2.15	Sports Courts	25
2.16	Multi-Purpose Fields (Softball and Soccer Turf Areas)	27
2.17	Site and Sports Lighting	29
2.18	Irrigation Systems	32
2.19	Planting	38
2.20	Permanent Best Management Practices (Green Infrastructure)	40
2.21	Synthetic Turf	41
2.22	Requirements and Standards for All Buildings	43
2.23	Comfort Stations	44
2.24	Recreation Centers	47
2.25	Aquatics Facilities	48
2.26	Graffiti Protection	52

3. GRAPHIC AND DRAFTING STANDARDS

3.1 General Development Plans (GDPs) 53
3.2 Construction Plans 54
3.3 As-Built Plans 63

4. PROJECT PROCESS, SUBMITTALS AND APPROVALS

4.1 General Development Plans (GDPs) 64
4.2 Construction Plans 66
4.3 As-Built Plans 67

5. APPENDICES

Appendix A Park and Recreation Board Policies:
Park and Recreation Board Policy No. 1001, Naming of Parks
Park and Recreation Board Policy No. 1011, Graphic Presentations
Park and Recreation Board Policy No. 1302, Park Signs

Appendix B Sample Irrigation Legend

Appendix C Approved Manufacturers and Products List

Appendix D Standard Park Details:
A. Multi-Purpose Courts
B. Tennis Courts
C. Softball Field and Backstop
D. Tot Lots

Appendix E Trail Policies and Standards

Appendix F Policy on Avoiding Use of Non-Native Invasive Plants in Parks and Recreation Projects

Appendix G General Development Plan Border

Appendix H Sample General Development Plan

PREFACE

The Consultant's Guide to Park Design and Development (Consultant's Guide) is prepared by the Administrative Services Division of the Parks and Recreation Department. The Parks and Recreation Department will update the Consultant's Guide on an as-needed basis. This document can be obtained from the City web site at **www.sandiego.gov/park-and-recreation**.

This document is a guideline for use by City staff, design consultants, and the general public in the design and development of improvements for City parks. These guidelines support the City's General Plan and Policy Documents but are subject to change due to changes in local, State and Federal laws, and changes in City policy or administration.

The Parks and Recreation Department is dedicated to the high quality of this publication and desires to correct any errors, omissions, or ambiguities. If you have any corrections, additions or suggestions you would like to submit for consideration to be included in the next publication, please send them in writing to:

Consultant's Guide to Park Design and Development
Parks and Recreation Department
City of San Diego
202 C Street, M.S. 35
San Diego, CA 92101

Or submit them by e-mail to **AskParks@sandiego.gov**

LISTING OF UPDATES

(Reserved for future updates)

1 INTRODUCTION

1.1 INTENT

The Parks and Recreation Department has developed the Consultant's Guide to Park Design and Development (Consultant's Guide) to establish general standards, guidelines, and criteria for the design and development of improvements in City parks and open spaces. The Consultant's Guide is not a substitute for professional experience and is not intended to supersede applicable codes and regulations. Sound judgment must be exercised in the application of the standards to specific circumstances. The standards do not preclude the use of different methods when special conditions or site-specific conditions are a factor and when proper authorization is obtained.

The Parks and Recreation Department encourages partnering between the staff of the Parks and Recreation Department, including landscape architects, maintenance, recreation programming, and operations (collectively "Department Staff"); the entity responsible for the execution of the park's design and construction ("Project Manager"); and the entity responsible for designing, obtaining permits, and preparing construction documents for the park ("Consultant") promote achievement of these standards, which result in quality parks. In this respect, Department Staff encourages Project Managers and Consultants to take the time at the start of a project to identify a clear project scope, common goals, lines of communication, and a commitment to cooperative problem solving.

If a major deviation from the standards within the Consultant's Guide is necessary or desirable, the Project Manager and/or Consultant shall notify Department Staff in writing. Department Staff will evaluate the proposed change for approval and consider it as a possible future revision to the Consultant's Guide. Any deviations from the standards established in this Consultant's Guide must be approved in writing from the Parks and Recreation Department.

1.2 GOALS

The Parks and Recreation Department ensures quality parks by basing designs on the following goals:

Aesthetics: Parks should project a positive image and establish a permanent character for the community and City. Park designs should provide a sense of arrival with reference points to promote circulation. They should provide places for groups and individuals for both formal and impromptu events. They should indicate nature through seasonal changes and provide something unique, obvious, complex, and simple. They should provide human and monumental scale and should be visible from a distance. Overall, a sense of place and community should be created through the design of each Park.

Function: Parks should be designed for all community members to use and enjoy the facilities. The Consultant must functionally design the park for Department Staff, which maintains the facilities. This includes application of the most current products and industry standards to the park's design.

Economics: In coordination with Department Staff, parks should be designed for the allocated budgetary considerations and to provide economical means of maintaining the park.

1.3 APPLICATION

The Consultant's Guide applies to all parks, rights-of-way, maintenance assessment districts (MADs), gas tax medians, permanent storm water management Best Management Practices (BMP's/green infrastructure), and open spaces that are to be maintained by the Parks and Recreation Department or a City Maintenance Assessment District. This includes all new parks, retrofitting existing parks, Capital Improvement Projects, parks built using public funds (referred to as Public Projects), parks built using private funds and turned over to the City (referred to as Turn-Key Projects or Developer Built Projects), parks that are part of a joint use agreement, and parks within City open space areas.

1.4 TYPES OF PARKS

The City of San Diego's General Plan Recreation Element defines numerous types of parks for residents and visitors, such as: 1) Resource-based Parks, including Regional Parks and Shoreline Parks and Beaches; 2) Population-based Parks, consisting of seven categories of parks; 3) Maintenance Assessment District Parks; and 4) Open Space Parks as described in this section.

1.4.1 Resource-Based Parks: Resource-based parks serve City residents and visitors alike, are intended to preserve and make available to the public areas of distinctive scenic, natural, historical or cultural interest, and include Regional Parks and Shoreline Parks and Beaches. Beaches (e.g. Ocean Beach Park), historical sites (e.g. Balboa Park), and natural canyons and water courses (e.g. Mission Trails Regional Park) are examples of this type of park. A Regional Park is typically controlled by a master plan and can supplement the facilities found in neighborhood and community parks to fulfill daily recreational needs of surrounding residents. Shoreline Parks and Beaches typically do not have a master plan to control its development for recreational use (exceptions include Sunset Cliffs Natural Park Master Plan and Torrey Pines City Park Master Plan).

1.4.1.1 Resource-based parks include:

- All beaches
- Balboa Park
- Black Mountain Open Space Park
- Los Penasquitos Canyon Preserve
- Mission Bay Park
- Mission Trails Regional Park
- Otay Valley Regional Park
- Presidio Park
- San Diego River Park/Mission Valley Preserve
- San Dieguito River Park
- San Pasqual and Clevenger Canyon Open Space Park
- Sunset Cliffs Natural Park

1.4.2 Population-based Parks: Population-based parks are divided into seven categories: Major Parks, Community Parks, Neighborhood Parks, Mini Parks, Pocket Parks, Plazas, and Special Activity Parks. Population-based parks are intended to serve the local daily recreational needs of residential areas, and ideally, are within walking distances of the residences within their service areas. The City General Plan Recreation Element sets a minimum standard for population-based parks of 2.8 useable acres per 1,000 residents. Useable acres is defined as a graded pad not exceeding two percent rough grade, as required to provide for structured, public recreational programs of an active nature common to local parks in the City of San Diego (such as ball games or court games), or gently sloping land not exceeding ten percent grade for unstructured public recreational activities, such as children's play areas, appreciation of open spaces, or a combination thereof, and unconstrained by environmental restrictions that would prevent its use as a park and recreation facility, free of structures, roads or utilities, and unencumbered by easements of any kind.

1.4.2.1 Major Parks: Major Parks, also known as "Great Parks" or "Grand Parks" are typically 20 useable acres or more and serve a single community or multiple communities. Facilities are typically specialized to serve larger populations, such as aquatic complexes, but may also include those found in Community Parks and Special Activity Parks.

1.4.2.2 Community Parks: Community Parks typically serve 25,000 residents and contain passive and active recreation facilities. Ideally, they should have a minimum of 13 useable acres. They should provide a wide range of facilities that supplement those of the neighborhood parks and which are determined by the needs and preferences of the community. Recreation centers, lighted athletic fields and multipurpose courts, picnic facilities, play areas, parking areas, comfort stations, landscaping, and passive turf areas are standard amenities. When possible and desirable, swimming pools and tennis courts may be provided, as well as facilities found in Special Activity Parks.

1.4.2.3 Neighborhood Parks: Neighborhood Parks serve a resident population of 5,000 residents within approximately a one-mile radius. Ideally, they should have three to 13 useable acres. The design and type of facilities should be determined by the residents to be served and use characteristics of the neighborhood. Play areas, multi-purpose fields, comfort stations, multi-purpose courts, picnic facilities, landscaping, and open turf areas are typical amenities in Neighborhood Parks.

1.4.2.4 Mini Parks: Mini Parks serve a resident population within approximately a one-half mile radius, and ideally should have one to three useable acres. The design and type of facilities should be determined by the residents to be served and use characteristics of the neighborhood. Play areas, multi-purpose fields, multi-purpose courts, picnic facilities, walkways and landscaping are typical amenities in Mini Parks, as space permits.

1.4.2.5 Pocket Parks and Plazas: Pocket Parks and Plazas serve a resident population within approximately a one quarter mile radius and are typically less than one useable acre in size. Typically, they are accessible by bicycling and walking; no on-site parking, except for disabled access, is provided. The design and type of facilities should be determined by the residents to be served and use

characteristics of the neighborhood and available space. Pocket Parks may include children's play areas, multi-purpose turf areas, multi-purpose courts, picnic facilities, walkways, and landscaping as space permits. These parks are often found within residential development and may be constructed as a condition of development.

1.4.2.6 **Plazas:** Like Pocket Parks, Plazas serve a resident population within approximately a one quarter mile radius and are typically less than one useable acre in size. Typically, they are accessible by bicycling and walking; no on-site parking, except for disabled access, is provided. The design and type of facilities should be determined by the residents to be served and use characteristics of the neighborhood and available space. Plazas must be destination-oriented public space designed for active or passive recreational uses to serve residents as well as workforce populations and visitors. Ideally, they should be easily accessible from public rights-of-way; be flexibly programmable for a wide variety of uses; and allow for versatility to accommodate varied activities, chance encounters, and public interaction. They may consist primarily of hardscape surfaces but may include children's play areas, multi-purpose courts, picnic facilities, seating areas (fixed or movable, as appropriate), walkways, and landscaping as space permits.

1.4.2.7 **Special Activity Parks:** Special Activity Parks vary in size by activity and population to be served and may serve one or multiple communities. Examples of Special Activity Parks include off-leash dog parks, skateboard parks, bicycle pump tracks, soccer/roller hockey arena (including futsal), tennis complex, sports complex, aquatic complexes, or other unique uses. These amenities may also appear as an amenity within the other categories parks.

1.4.3 **Joint Use Areas**: The City and school districts may decide to partner on jointly using facilities that meet the needs of both general public and student recreation. During school hours, the joint use area is used by the school district and its students; during non-school hours, the joint use area is available for public use. Typical amenities in a Joint Use Area may include passive turf lawn area, active use ball field, walking track, hard courts, play areas, and related amenities. Joint Use Areas may count toward the calculation of population-based park acres.

1.4.4 **Maintenance Assessment District (MAD) Parks and Streetscapes:** Maintenance Assessment District (MAD) Parks are special parks that are maintained through an assessment of nearby property owners that is levied annually. Maintenance Assessment Districts maintain a variety of landscaping features, including parks and streetscapes. Generally, in cases where a Maintenance Assessment District maintains a park, typically the park acreage for the community is above the population-based acreage standard identified in the City's General Plan and are maintained through a special assessment of nearby property owners within the "area of benefit." Usually, MAD parks have amenities that are most similar to a neighborhood, mini, or pocket park. Most Maintenance Assessment Districts also maintain streetscapes, which typically include enhanced improvements along public rights-of-way, including street trees, greenbelt landscaping, center median landscaping, planted slopes, decorative benches and trash receptacles, decorative paving, enhanced street lighting, and trails that are typically adjacent to public rights-of-way.

1.4.5 Open Space Parks: Open Space Parks are land which is owned by the City consisting of canyons, mesas and other natural landforms. Open Space Parks are intended to preserve and protect native plants and animals while providing public access and enjoyment by the use of trails for hiking, biking and horseback riding. Open Space Parks generally have minimal development and are intended to remain in their natural state.

2 PARK DESIGN STANDARDS

2.1 GENERAL STANDARDS

The following design standards address functional and aesthetic issues for park and open space design and are to be referenced and utilized during the formulation of General Development Plans and final Construction Plans. All parks and open space shall meet the following guidelines and regulations (the stricter rule applies):

- Americans with Disabilities Act (ADA)
- Americans with Disabilities Act Accessibility Guidelines (ADAAG)
- Title 24 of the California Building Code (CBC)
- California Building Code (CBC)
- California Energy Code (CEC)
- American Society for Testing and Materials (ASTM)
- Consumer Products Safety Commission (CPSC)
- The Public Playground Safety Handbook
- Standard Specifications for Public Works Construction (Greenbook), including the City of San Diego "Whitebook" supplement
- San Diego Municipal Code
- City of San Diego Standard Drawings (SDSD)
- Uniform Building Code (UBC)
- City of San Diego Rules and Regulations for Recycled Water Use
- City of San Diego Storm Water Standards Manual
- City of San Diego Street Design Manual
- City of San Diego Drainage Design Manual
- City of San Diego Low Impact Design Manual
- City of San Diego Police Department's "Crime Prevention Through Environmental Design"
- City of San Diego Facilities Maintenance New Construction Standards and Specifications
- City of San Diego General Plan, Recreation Element
- City Council Policy No. 200-14, Park and Recreation Facility Landscape Design
- City Council Policy No. 600-33, Public Notification and Input for City-wide Park Development Projects
- City Council Policy No. 900-14, Sustainable Building Policy
- City Council Policy No. 900-20, Naming of City Assets

The Consultant shall verify with the Project Manager the project program, the specific size, and functional requirements for the programmed facilities and the project budget prior to beginning the design process.

The Consultant has the sole responsibility to design a project in compliance with current and adopted ADA Standards (Federal) and CBC (State) access law requirements. These guidelines are for information only and do not relieve the Consultant of liability in any way. Failure to design in conformity by law shall be remedied at the Consultant's own expense. Please note that the more stringent requirements of the ADA Standards or CBC shall apply. It is the Consultant's responsibility to implement the stricter standard to the project. The City will not be responsible for any errors or omissions in the evaluation and plan review of the design.

2.2 SITE PLANNING

Park design and site planning shall include analysis and integration of on-site and off-site features such as bicycle and pedestrian trails, open space areas, topography, views, existing vegetation, and joint-use needs of adjacent schools. Community Plans, Master or Precise Plans, General Development Plans, and other City planning documents shall be referenced when analyzing and evaluating the project during site planning.

2.3 PLAZA PLANNING AND DESIGN

General Plan Guidelines define plazas as: less than 1 acre; serves population within ¼ mile; accessible by bicycling and walking; no on-site parking, except for disabled access; may require funding source for extraordinary maintenance. Typical Components per the General Plan are: primarily hardscape; picnic areas, seating, children's play areas, walkways and landscaping; multipurpose courts; and multipurpose turf areas. The following criteria will ensure that plazas perform as public park land, as opposed to private open space to serve private, commercial enterprises which may be located adjacent to the public plaza.

2.3.1 Site Planning: Plazas should be sited to comply with the following locational criteria:

2.3.1.1 Provide maximum visibility from adjacent rights-of-way and properties for safety purposes ("eyes on the park").

2.3.1.2 Ensure accessibility from adjacent public rights-of-way or other public spaces, and preferably, adjacent to or in close proximity to public transit.

2.3.1.3 Consider best environmental control of space in terms of sunlight, shade, wind, and noise (e.g., buildings provide shade or reflect sunlight).

2.3.1.4 Capitalize on or create synergy among/between bordering or adjacent commercial uses and people using the plaza space (e.g., publicly or privately-operated food service, coffee cart, newspaper/magazine vendor, etc.).

2.3.2 Site Design: Plazas should be designed with community input, for the intended users and programmable for public functions in compliance with the following design criteria:

2.3.2.1 Provide a destination-oriented, flexible/versatile space created with a sense of place/image/arrival, welcoming, comfortable, and aesthetically pleasing park, including focal points and public gathering spaces to accommodate a variety of recreational uses.

2.3.2.2 Provide uses that differ from those at other nearby plazas for variety.

2.3.2.3 Arrange amenities to promote socialization and passive recreation for groups or individuals (e.g., movable seating, grouped seating, game tables, tot lot, performance/stage area, information kiosks, etc.). Allow for unexpected experiences, chance encounters, and public interaction.

2.3.2.4 Provide for passive and active recreational uses, as appropriate. Passive uses may include outdoor eating, playing board games or cards, reading, relaxing, people watching, sun-bathing, tai chi, yoga, children's play, planned or impromptu

music, public forum/speeches, temporary art exhibition or sculpture garden, open-air markets, vendor spaces, and outdoor movies. Active uses may include children's play area, horseshoes, bocce ball, ½-court basketball, aerobics and water play/interactive fountains. Some of these uses may be restricted based on the parkland dedication status and available space within the park.

2.3.2.5 Fencing should be avoided or minimized to provide open access 24/7; if controlled access (fences/gates) is warranted and approved by the City, plaza shall be open to the public from dawn to dusk, similar to public parks elsewhere within the community.

2.3.2.6 Materials should be durable, high-intensity, and easy to maintain, including plant materials.

2.3.2.7 Provide overhead lighting with shields to prevent light spillage onto adjacent properties.

2.3.2.8 Provide for noise control, where necessary, to prevent potential disturbance to adjacent property owners, as well as other park users.

2.3.2.9 Provide shade and wind breaks, where necessary, for comfort of park users (e.g., deciduous trees, shade structures over certain plaza features such as picnic tables and playgrounds, canopies or umbrellas, planted or transparent windscreens, etc.).

2.3.2.10 Incorporate public art into functional site elements as opposed to free-standing art elements (e.g., hardscape, touchable water features, light or sound art, playground equipment, site furniture, seat walls on raised planters, murals, art integral to architecture or landscape, etc.).

2.3.2.11 Accommodate location for temporary public toilets when plaza is intended for large public gatherings.

2.3.2.12 Provide signage to notify the public that the plaza is a public park, the hours of operation, intended uses, restrictions, etc.

2.3.2.13 Provide for universal accessibility; when plaza is not primarily hardscape, access through the plaza space should be purposeful, linking public rights-of-way with essential plaza elements, such as food concessions or play areas.

2.3.2.14 Plant Material shall be drought tolerant and able to withstand high volumes of public use.

2.3.2.15 Due to limited space, stormwater measures should be accomplished with permeable pavement whenever possible.

2.3.3 Maintenance: Most plazas will be privately-owned and maintained with a public access easement.

2.3.3.1 Establish a "friends of" group as part of the design process to advise on maintenance and operations of the site, possibly a subcommittee of an advisory group.

2.3.3.2 Programmed regular and special events shall be reviewed and approved by advisory committee quarterly.

2.3.3.3 Controlled access proposals shall be reviewed and approved by advisory committee.

2.4 GRADING AND DRAINAGE

2.4.1 **General:** All park projects shall have positive drainage and provide the necessary components for drainage. Drainage is to be directed away from buildings, electrical enclosures, backstops and irrigation controllers. The following gradients shall be used in preparing grading and drainage plans.

Use:	**Grade:**
Walkways and Pedestrian Paving: Pedestrian walkways and monolithic surfaces of concrete, asphalt or unit pavers	4.5% maximum. 1.5% maximum cross slope, no exceptions. Paving outside of street rights-of-way shall meet current Title 24 and ADA accessibility standards.
Basketball and Volleyball Courts: Multi-purpose paved courts	Drain end-to-end at 1%.
Tennis Courts:	Drain side-to-side or end-to-end at 1%. Never allow high point at net.
Multi-purpose Fields:	1.5% minimum, 2% maximum.
Softball and Baseball Fields:	1.5% for skinned and turf infields. 1.5% for turf outfields. Provide positive drainage away from home plate in all cases.
Parking Areas: Asphalt	1% minimum, 4% maximum with a 4.5% maximum cross slope. 1.5% maximum slope in any direction where accessible parking is required, no exceptions.
Turf Areas: Passive recreation	2% minimum, 20% (5:1) maximum.
Shrub and Groundcover Areas:	2% minimum, 50% (2:1) maximum.
Mulch Areas:	2% minimum, 20% (5:1) maximum.
Unpaved Trails:	Developed parks: 1.5% minimum, 4.5% maximum. 1.5% maximum cross slope, no exceptions. Open space parks: see Trail Policies and Standards, Appendix E

2.4.2 Storm Water Systems: Storm water and drainage systems shall be designed in accordance with City of San Diego Storm Water Standards Manual, Drainage Design Manual and Low Impact Design Manual.

2.4.3 Permanent Storm Water Best Management Practices (BMPs/Green Infrastructure): The Parks and Recreation Department is responsible for maintaining vegetated and non-vegetated storm water facilities within parks and along some roadways, including but not limited to retention basins, infiltration basins, detention basins, filter strips, bio-swales, and similar structures.

2.4.4 Field Drainage: Multi-purpose fields shall typically be crowned in the center with drainage to the sides. Certain sites and field overlay situations may make this drainage pattern unachievable. In such cases, other drainage patterns or drainage devices will be considered and approved by the Parks and Recreation Department. In all cases there shall be positive drainage away from home plate. Drainage catch basins or manholes shall not be located within the field of play.

2.4.5 Finished Grade: Finish grade for turf areas shall be one inch below walks, mow curbs or other paving. Finish grade for shrub, groundcover, or mulch areas shall be two inches below walks, mow curbs, or other paving.

2.4.6 Security: Grading shall be such that a police officer seated in a vehicle may observe the entire park while driving through or around it. Planting types should be considered in conjunction with grading. Avoid mounds, berms, plantings, or combinations thereof that provide hiding places. See Appendix F, "Crime Prevention Through Environmental Design."

2.5 PAVING, WALKWAYS AND MOW CURBS

2.5.1 Paving and Walkway Designs: Walkways are provided in all parks for functional and aesthetic purposes. Functionally, walkways should provide connections to different parts of the park and lead to special landmarks. Walkways that provide a loop system are preferred. Primary walkways in the park shall be concrete paving. At park perimeter(s) and parking lots, walkways should be located to provide a logical, convenient, and aesthetic means of accessing the park. Walkways shall be accessible to all users. Aesthetically, walkways should be designed to allow the user to enjoy on and off-site views and access the different amenities of the park.

2.5.2 Walkway Locations: Where possible, provide walkways to separate turf areas from shrub and groundcover areas to reduce edging costs.

2.5.3 Walkway Widths

2.5.3.1 Primary pedestrian/maintenance access walkways and security lighting require a nine-foot wide minimum. This includes walkways that require vehicular access for maintenance or replacement of park amenities such as picnic tables and trash receptacles.

2.5.3.2 Walkways adjacent to ball field lights require a twelve-foot wide minimum.

2.5.3.3 Walkways adjacent to parking stalls without wheel stops require a nine-foot wide minimum.

2.5.3.4 Secondary pedestrian walkways without maintenance access or security lighting require a six-foot wide minimum.

2.5.4 Walkway Construction

2.5.4.1 Walkway construction and reinforcement shall be based on San Diego Standard Drawings and the geotechnical report prepared specifically for the project. The Geotechnical Engineer is encouraged to provide recommendations for paving that avoid the use of steel reinforcement. Geotechnical testing shall be provided during the design phase and shall be included in the bid documents. When no geotechnical report is available, walkways shall be constructed in accordance with the San Diego Standard Drawings, Greenbook, and Whitebook specifications.

2.5.4.2 Walkways that are required to support maintenance vehicles shall be clearly identified on the plans and designed to support maintenance vehicles. The minimum thickness shall be six inches for these walkways. Walkways adjacent to ball field lights and site security lights shall be designed to meet this criterion.

2.5.4.3 Construction joints shall be per San Diego Standard Drawings. Caulking of expansion joints is discouraged and does not follow standard City practices and details.

2.5.4.4 Walkways shall be designed per the San Diego Standard Drawings. Steel reinforcement shall not be used unless deemed necessary. Concrete shall be 6-inch minimum thickness where steel reinforcement is used. Use only rebar for reinforcement; welded wire mesh is not acceptable.

2.5.5 **Unpaved Walkways:** Unpaved walkways may be proposed as a secondary component of a park's circulation system. These walkways shall be stabilized decomposed granite, pre-mixed by the plant at the rate recommended by the manufacturer, prior to delivery. A weed barrier is recommended below all decomposed granite paving. The preferred walkway edging is concrete, non-corrosive metal or recycled plastic lumber (Trex or equal). Edging adjacent to turf areas shall be concrete. The width of unpaved walkways shall be as specified in section 2.4.3, Walkway Widths. See Appendix E for trail guidelines for Open Space parks.

2.5.6 **Mow Curbs:** Concrete mow curbs shall be provided to separate all turf areas from shrub, groundcover or mulch areas, to contain decomposed granite paving, under fencing adjacent to turf that requires edging or mowing, and as an integral component of any wall (both at the top and bottom) where turf is proposed or exists. Mow curb width shall be eight inches minimum, 16 inches minimum beneath fences.

2.6 <u>TRAILS</u>

Trails provide for the use of alternative modes of transportation, as well as recreational activities. The various trail components within the City of San Diego include pedestrian, bicycling and equestrian trails. Trails shall be designed in compliance with the Parks and Recreation Department's Trail Policies and Standards contained in Appendix E.

2.7 FENCING AND WALLS

2.7.1 General: Parks shall be designed functionally and visually as open as possible with as little fencing as possible. Fencing shall only be provided for multipurpose fields, joint use areas or where there is a safety issue that cannot be reasonably addressed by some other means. Fencing may be used where a play area is in close proximity to streets, parking lots, or other high-volume vehicular use areas that pose a safety concern. For security reasons, solid fencing shall not be used.

2.7.2 Ornamental Fencing: Ornamental fencing shall be used to maintain views or to be consistent with a project's design theme. All components shall be tubular steel or heavy-duty aluminum. Tubular steel components shall be hot dip galvanized after fabrication (free of burrs and sharp edges). Steel posts and rails shall be minimum 14-gauge, and steel pickets shall be minimum 16-gauge. Fence color shall be a powder coated paint applied electrostatically.

2.7.3 Chain-Link Fencing: Chain link fencing may vary in height and detailing as per the specific site use(s) and requirements. If a fence exceeds eight feet in height a mid-rail will be required. Chain link fabric shall be located on the side adjacent to play or use areas.

2.7.4 Gates: Pedestrian gates shall be a minimum of four feet wide. Gates for maintenance vehicles shall be a minimum of twelve feet wide; use double swing gates.

2.7.5 Walls (Retaining and Free-standing)

2.7.5.1 Walls shall be designed and located to discourage skateboarding and graffiti vandalism. Walls designed to avoid the need for skate stoppers are preferred to straight walls with skate stoppers.

2.7.5.2 All concrete masonry walls shall be finished with a wall cap made of precast concrete units that are sized for the block or shall have a custom cap designed for the wall; mortar caps are not acceptable.

2.7.5.3 Rough masonry such as split faced block is discouraged due to difficulty of graffiti abatement.

2.7.5.4 Caps for walls less than 36 inches in height and adjacent to walkways or turf areas shall have radiused (bull-nosed) or chamfered edges for safety.

2.7.5.5 Retaining walls shall be installed with wall drains per San Diego Standard Drawings.

2.7.5.6 Guard rails or fencing shall be provided at the top of walls when walls are over 30 inches in height with turf or walkways adjacent to the top.

2.7.5.7 Walls and caps shall have anti-graffiti coating applied.

2.7.5.8 Walls adjacent to turf shall have a mow curb per Section 2.4, Paving, Walkways and Mow Curbs.

2.8 PARKING AREAS

Parking areas shall meet the City's Parking Regulations (Municipal Code § 142.0500), California Building Code Title 24, Americans with Disabilities Act, San Diego Standard Drawings, and the parking ratios listed below. Non-programmed parkland includes passive recreation areas and picnic areas that are not scheduled for regular activities. Unusable park land such as steep slopes or natural areas shall not be used in calculating parking space requirements. See 2.17.1 for planting requirements in parking areas.

2.8.1 Parking Ratio for Neighborhood Parks

2.8.1.1 Provide five (5) parking spaces per acre of non-programmed parkland.

2.8.1.2 Multi-Purpose Fields: When a neighborhood park has softball fields, provide an additional thirty (30) parking spaces per backstop.

2.8.1.3 Parking may be provided by on-site parking facilities or on adjacent streets. If parking is provided on adjacent streets, only those spaces immediately adjacent to the park may be included; parking spaces located across the street or on non-adjacent streets will not be included.

2.8.2 Parking Ratio for Community Parks

2.8.2.1 Provide five parking spaces per acre of non-programmed parkland.

2.8.2.2 Recreation Centers: One (1) parking space per 200 square feet of building.

2.8.2.3 Swimming Pool Facility: One (1) parking space per 175 square feet of pool surface area, in addition to the parking spaces required for the recreation center.

2.8.2.4 Multi-Purpose Fields: Thirty (30) parking spaces per backstop, in addition to the parking spaces required for the recreation center or swimming pool facility.

2.8.2.5 Tennis Courts: Twelve (12) parking spaces per six courts, in addition to the parking spaces required for the recreation center. If less than six courts are provided, no additional parking is required.

2.8.3 Parking Area Paving: Geotechnical testing shall be conducted to provide a paving section design for the parking lot and all vehicular access paths. Provide a pavement section on the construction plans based on R-values and Schedule 'J' pavement recommendations of the San Diego Standard Drawings, Cul-de-sac Criteria and CBR's for parking lots.

2.8.4 Dimensions: Dimensions for parking spaces and drive aisles shall meet or exceed the Land Development Code, Parking Regulations, Municipal Code §142.0500.

2.8.5 Striping: The paint utilized for striping and mark-outs shall be based on Greenbook and Whitebook specifications.

2.8.6 Wheel Stops: Minimize the use of wheel stops. Wheel stops trap debris and increase maintenance.

2.8.7 Parking Areas Adjacent to Turf: To compensate for vehicular over-hang adjacent to turf areas, provide a minimum four-foot-wide concrete strip to allow operation of mowers when vehicles are parked. Where a walkway is required, see Section 2.4, Paving Walkways and Mow Curbs.

2.8.8 Maintenance/Access Strip: Where parking spaces are adjacent to landscaped areas, provide a twelve-inch-wide concrete strip of paving for user and maintenance access.

2.9 TRASH ENCLOSURES

Trash enclosures shall be constructed with concrete masonry block. Trash enclosures shall be located within or adjacent to parking lot areas. Trash enclosures shall be sized to house a minimum of two dumpsters; one for trash and one for recycling. A third dumpster for green waste (lawn clippings, tree trimmings, etc.) may be added at the direction of staff as needed. A heavy vehicle load paving section for the drive lane and the concrete apron shall be provided at the head of the enclosure. Minimum size of the concrete apron shall be sufficient to allow refuse vehicle access to the trash receptacles. Specific dimensions, location, and design shall be reviewed and approved by Department Staff. The walls of the trash enclosure shall be treated with anti-graffiti coating inside and out. The enclosures shall have solid steel doors or chain link doors with screening slats with locking ability.

2.10 SITE FURNITURE

2.10.1 General: All parks shall include site furniture such as picnic tables, benches, drinking fountains, barbecues, hot coal receptacles, bicycle racks, and trash receptacles. Types of site furniture selected shall be based on the type of park, design character, durability, and maintenance. Precast concrete furniture with anti-graffiti coating is preferred for durability. Site furnishings shall complement each other in color, materials, and form. Site furniture shall be permanently secured to the paving per the manufacturer's recommendations. Site furniture that bolts together is not permitted. Site furniture shall be selected from the Approved Manufacturers and Products List in Appendix C.

2.10.2 Locations: Locate site furniture outside of turf areas whenever possible. Site furniture in turf areas shall be placed on a concrete pad with a minimum of eight inches of clearance around to accommodate mowers. Site furniture in turf areas shall be spaced a minimum of twelve feet from other site furniture, fencing, walls, lights, trees, and other vertical obstructions to accommodate City mowers. Site furniture shall be located to avoid conflicts with irrigation systems and other park improvements.

2.10.3 Picnic Tables: Picnic tables shall be placed on concrete pads with a 1.5% maximum slope in any direction. Concrete pads shall extend four feet beyond the table/bench dimensions on all sides. The orientation of picnic tables adjacent to walkways shall be perpendicular to the path of travel to discourage skateboard activity. Picnic table configurations shall meet current accessibility standards for quantity, location, and design. One-piece tables with benches are required; deviation from this standard must be approved in writing by Department Staff.

2.10.4 Park Benches: Park benches shall be constructed of concrete unless approved otherwise by Parks and Recreation Department Staff. Benches shall be a one-piece monolithic design; bolt-together benches are discouraged. Park benches shall be placed on concrete pads and designed and located to discourage skateboard activity. When located in turf areas, the concrete pads shall provide a minimum eight inches of clearance around the perimeter to accommodate mowers. Bench configurations shall meet current accessibility standards for quantity, location, and bench design. Provide enlarged concrete pads to allow for companion seating per accessibility standards.

2.10.5 Drinking Fountains: Each park shall have at least one drinking fountain. Drinking fountains shall have a two-basin high-low design compliant with ADA requirements. Where softball backstops are included, provide one drinking fountain for each backstop or group of backstops. Where recreation centers or comfort stations are included, provide a wall mounted drinking fountain on the exterior of the building or a pedestal style drinking fountain in the immediate vicinity. When a drinking fountain is building mounted, all plumbing shall be concealed within the walls of the building or within the plumbing chase; plumbing exposed to the public is not acceptable. Provide at least one drinking fountain with a "pet friendly" drinking bowl with an accessible actuator in each park (high-low-dog). <u>All</u> drinking fountains shall comply with current accessibility standards.

2.10.6 Barbecues and Hot Coal Receptacles: Barbecues and hot coal receptacles shall be located outside of circulation routes. Hot coal receptacles shall be visible from the barbecue area(s). Barbecues and hot coal receptacles shall be located on a non-combustible surface such as concrete paving, stabilized decomposed granite or turf; do not locate them in shrub/groundcover areas or mulch areas. If located in turf areas, provide a concrete pad with a minimum of eight inches of clearance around the perimeter to accommodate mowers.

2.10.7 Bicycle Racks: Bicycle racks shall be located on a paved area outside major circulation routes.

2.10.8 Trash and Recycling Receptacles: All trash and recycling receptacles shall comply with current City storm water standards. Provide pairs of trash and recycling receptacles. Unless otherwise approved, all trash and recycling receptacles shall be square, concrete, and provided with a locking side opening to facilitate servicing. All trash and recycling receptacles shall have a protective 'hood' cover. Trash and recycling receptacles shall be located in paved areas or shall have their own concrete pad. Provide a minimum of eight inches of clearance around the trash/recycling receptacles when in or adjacent to turf areas to accommodate mowers. Trash receptacles shall be secured to the pavement per manufacturer's recommendations. Orient receptacles such that the service doors are readily accessible to maintenance staff.

2.11 PARK IDENTIFICATION SIGNS

All parks shall have at least one permanently installed park identification sign. See Appendix A, Park and Recreation Board Policy No.1302 for the required sign elements. The City's seal shall be included in the design. The sign shall harmonize with the park's theme or natural character. Signs are typically one sided and parallel to the most prominent public street or angled if located at the intersection of two streets. Light fixtures to illuminate the signs shall be vandal resistant.

2.12 PLAYGROUNDS AND EQUIPMENT (TOT LOTS)

2.12.1 General

2.12.1.1 Playgrounds shall be designed to offer the greatest "play value" possible within the budgetary constraints and physical restrictions of the site. The play experience should challenge the users by addressing their physical, social and mental development while providing entertainment. The play environment shall be safe, durable, and vandal resistant, and it shall require minimal maintenance. Playgrounds and equipment shall meet the current requirements of the following:

- Americans with Disabilities Act (ADA)
- Consumer Product Safety Commission (CPSC) Handbook for Public Playground Safety
- American Society for Testing and Materials (ASTM):
  - Standard Specification for Impact Attenuation of Surfacing Materials within the Use Zone of Playground Equipment (ASTM F1292)
  - Standard Consumer Safety Performance Specification for Playground Equipment for Public Use (ASTM F1487)
  - Standard Specification for Determination of Accessibility of Surface Systems Under and Around Playground Equipment (ASTM F1951)
  - Standard Specification for Engineered Wood Fiber for Use as a Playground Safety Surface Under and Around Playground Equipment (ASTM F2075)
  - Standard Guide for Specification, Purchase, Installation and Maintenance of Poured-In-Place Playground Surfacing (ASTM F2479)
  - Standard Safety Performance Specification for Fences/Barriers for Public, Commercial, and Multi-Family Residential Use Outdoor Play Areas (ASTM F2049)

2.12.1.2 **Age Separation:** Playground areas for "pre-school" children (ages two to five years old) should be separated from playground areas for "school-age" children (ages five to twelve years old) whenever possible. Combined play equipment for ages 2-12 may be used on small sites with approval from the Director.

2.12.1.3 **Playground Hazards:** Potentially hazardous items such as barbecues and hot coal receptacles; plant materials with thorns or stickers or that attract bees; or other similar potential hazards shall not be located adjacent to playgrounds.

2.12.1.4 **Playground Maintenance:** Playgrounds with sand safety surfacing shall not be located adjacent to gymnasiums or recreation centers to prevent tracking of sand indoors. Drinking fountains shall not be located immediately adjacent to playgrounds with sand safety surfacing but should be in close proximity.

2.12.1.5 **Seating:** Provide seating close enough to playgrounds for adults to supervise children. Seating shall be designed to meet ADA requirements, and shall be designed or located to discourage skateboard damage. Do not locate benches within the playground unless they are an integral component of the play structure.

2.12.1.6 **Substitutions:** At the time of product submittals, any substitutions of play equipment specified on construction plans must fit the designed play area and be approved by the Parks and Recreation Department. Shop drawings or catalog cuts and a revised layout plan showing the substituted equipment and safety zones are required to determine acceptability of the substitution(s).

2.12.1.7 **Equipment Installation:** All play equipment shall be installed in accordance with the manufacturer's specifications. The construction documents shall specify the play equipment be installed as late in the construction process as possible.

2.12.1.8 **Equipment Footings:** With the exception of spring toys, the top of all play equipment footings located in loose fill material shall have a smooth finish and be a minimum of sixteen inches below finish grade of safety surfacing. Spring toys shall have footing edges chamfered at 45 degrees or rounded with a two inch minimum radius. Exposed bolts shall be cut off flush at the nut and spot welded and shall be three to six inches below finish grade.

2.12.1.9 **Steel or Aluminum Play Equipment:** Metal play equipment shall be colored by electrostatically applied powder coating or hot dipped galvanized with fused vinyl coating, minimum thickness of five mils.

2.12.1.10 **Product Availability:** Limit products to those readily available within the United States so replacement parts are more readily available.

2.12.1.11 **Trees:** Do not plant trees or other vegetation within the loose or poured-in-place safety surfacing for playgrounds. Do not plant deciduous trees in the vicinity of playgrounds that utilize sand as a resilient play surfacing.

2.12.1.12 **Fencing:** Incorporate safety fencing or other barriers when playgrounds are in close proximity to parking lots, roadways or other vehicular use areas per ASTM F2049. Fencing immediately adjacent to playgrounds shall be considered a part of the playground and meet requirements of ASTM F1487.

2.12.1.13 **Shade:** Provide shade for playgrounds to reduce sun exposure and daytime heat. Shade may be provided using shade shelters incorporated into the playground equipment or with separate shade sails or similar product. Posts for shade shelters shall not conflict with the playground equipment manufacturer's required safety zones. See "Prefabricated Picnic Shelters/Shade Shelters" for additional requirements.

2.12.1.14 Disapproved Play Equipment: The following equipment is not allowed by the Parks and Recreation Department.

- Plastic decks
- Decks with center access, unless rails are placed 90 degrees to main access or circulation patterns
- Perforations in excess of 3/16 inch in decks over 30 inches in height
- Decks which are secured with self-tapping screws
- Enclosed tunnel-slides or level tunnels, unless made of a mesh material
- Bubble panels, Lexan or Plexiglas 'windows'
- Sectional slides
- Wood components
- Metal slides
- Dark colored plastic slides in any orientation (tan, yellow or light gray only)
- Movable digging shovel toys that do not have a safety stop
- See-saws with fulcrum points (springs are acceptable)
- Pinch-type coil spring base animals
- Swings with heavy animal figures
- Half-bucket swing seats with chains to secure occupants
- Vinyl-clad cargo nets, except with non-slip clad, rigid horizontal bars
- Vinyl-clad swing chains
- Rigid swing seats
- Non-reinforced swing seats (must be slash resistant)

2.12.2 Playground Drainage and Construction

2.12.2.1 Subgrade: The subgrade for loose fill playground safety surfacing (sand, engineered wood fiber) shall be sloped to a subsurface drainage system at 1% minimum. The concrete base for poured-in-place rubberized safety surfacing shall slope to a subsurface drainage system at 1% minimum. The subgrade for poured-in-place rubberized safety surfacing shall be compacted to 90% minimum. Permeable concrete may be used for a subgrade if necessary to comply with storm water standards.

2.12.2.2 Subsurface Drainage Systems: Site stormwater requirements often require playgrounds to be permeable to minimize impacts to the site. All drainage systems shall be designed to meet requirements of the City's Stormwater Standards Manual and Drainage Design Manual. A subsurface drainage system shall be provided for all playgrounds.

2.12.2.3 Playground Containment: New playgrounds shall be contained by a minimum four-foot-wide concrete walkway with a deepened footing at the edge to retain loose fill material; the deepened footing may be omitted where poured-in-place rubberized safety surfacing is adjacent to the walkway. The walkway shall maintain a continuous elevation around the perimeter of the playground. The walkway shall slope 1.5% away from the playground. Sand or engineered wood fiber shall be installed to the top of adjacent paving. Site grading shall direct run-off away from the playground. See Standard Park Details, Appendix D.

2.12.3 Playground Safety Surfacing Materials: Acceptable safety surfacing materials include sand, engineered wood fiber, or poured-in-place rubberized safety surfacing. If both sand and engineered wood fiber products are used in the same play area they shall be separated from each other by a minimum of ten feet of paving or poured-in-place rubberized safety surfacing. See Standard Park Details, Appendix D.

2.12.3.1 Sand: Sand safety surfacing shall be a minimum of twelve inches deep and a maximum of four inches down from the top of the containment walkway. At installation, the sand shall be flush with the containment walkway or poured-in-place rubberized safety surfacing, making the depth at installation approximately 16 inches. The depth of sand shall be sufficient to attenuate falls per ASTM F1292. Sand shall be imported, double-washed, manufactured silica sand #20, #30 or "Pro Tour" sand as provided by A-1 Soils or approved equal. Sand shall be free of deleterious organic material, loam, clay, and debris, with a "mean effective size" between 0.30 millimeters and 0.65 millimeters and a "mean uniformity coefficient" between 1.00 and 2.50. The Contractor shall submit certification of the above requirement to the Resident Engineer at the time of product submittals. Sand shall only be used with a filter fabric and a drainage system.

2.12.3.2 Re-use of Existing Sand: Angular sand shall not be re-used. Existing rounded silica sand may be re-used in a playground when it can be demonstrated the sand meets the requirements listed for sand. Existing sand may need to be washed and screened to meet specifications.

2.12.3.3 Engineered Wood Fiber: The Parks and Recreation Department does not accept engineered wood fiber as an accessible surface. Engineered wood fiber may be used in lieu of sand; however, accessibility per ADA and Title 24 requirements must be achieved using poured-in-place rubberized safety surfacing. The engineered wood fiber safety surfacing shall be a minimum of 12 inches deep and a maximum of four inches down from the top of the containment walkway or poured-in-place rubberized safety surfacing. At installation, the engineered wood fiber shall be flush with the containment walkway or poured-in-place rubberized safety surfacing, making the depth at installation a minimum of 16 inches. The depth of engineered wood fiber shall be sufficient to attenuate falls per ASTM F1292. Engineered wood fiber shall be an energy absorbing protective safety surfacing manufactured for playground installations in compliance with ASTM F2075. Engineered wood fiber shall only be used with filter fabric and a drainage system.

2.12.3.4 Poured-in-Place Rubberized Safety Surfacing: Poured-in-place rubberized safety surfacing shall meet the requirements of CPSC and ASTM for play areas. All rubberized safety surfacing shall be installed on a concrete sub-base. Only aliphatic polyurethane binder shall be used; aromatic polyurethane binder is not acceptable. The color wear layer shall be ½ inch to 5/8-inch-thick and may be EPDM (ethylene propylene diene monomer) or TPV (thermoplastic vulcanizate). The buffing layer (cushion layer) shall be of a thickness sufficient to attenuate falls per ASTM F1292, and may be SBR (styrene-butadiene rubber) or approved equal. A single color or color blend for the wear layer is preferred; do not use multiple colors to create shapes or patterns in the surfacing.

2.12.4 Modular Play Equipment

2.12.4.1 All decks shall be punched steel; expanded metal mesh is not acceptable.

2.12.4.2 Decks and steps over 30 inches in height shall have 3/16-inch maximum diameter holes to prevent fingers protruding up from below being stepped on, and to minimize potential for hood drawstrings being caught in larger deck openings at the tops of slides.

2.12.4.3 Decks, steps, and transfer stations less than 30 inches in height may have larger holes to aid grasping and transfer from a wheelchair.

2.12.4.4 All decks shall have a non-skid surface.

2.12.4.5 The maximum deck height shall be six feet above playground safety surfacing. Decks higher than six feet may be allowed if the unit is fully enclosed with no potential for falls from the greater height, or if surrounded by poured-in-place rubberized safety surfacing with a thickness sufficient to attenuate falls per ASTM F1292.

2.12.4.6 Posts shall be five-inch minimum diameter steel or aluminum (no plastic or wood) for all age ranges.

2.12.4.7 Posts for play structures within one mile of the coast or bay shall be aluminum only.

2.12.4.8 Flat roofs or roofs that can be climbed on shall be set with a minimum clearance of seven feet above decks or adjacent step treads. Pitched roofs that cannot be climbed on shall be set with a minimum clearance of 6'-8".

2.12.5 Swings

2.12.5.1 Swings shall be free-standing with a minimum of four posts for stability; do not attach swings to modular play equipment.

2.12.5.2 All swings shall have five-inch diameter powder-coated steel or aluminum posts, or 3-1/2 inch diameter galvanized steel posts. Posts within one mile of the coast or bay shall be aluminum only.

2.12.5.3 When space permits, provide separate swings for ages two to five years old (bucket seats) and for ages five to twelve years old (belt seats). Age ranges may be combined on the same support structure but may not be combined in the same bay.

2.12.5.4 No more than two swings shall be hung in each bay of the support structure.

2.12.5.5 Swing chains shall be 4.0-gauge galvanized steel; no vinyl coating is allowed on swing chains.

2.12.5.6 Swiveling swing attachments that minimize chains wrapping around the top bar are preferred.

2.12.5.7 Belt seats shall be slash proof. Hard seats are not acceptable.

2.12.5.8 Fully enclosed bucket seats shall be molded rubber, reinforced with steel. Half bucket seats with chain restraints are not acceptable.

2.12.5.9 Provide a safety zone for the swing set equal to two times the height of the top rail in front and in back of the centerline of the swing, and six feet clear between the support posts and other structures. Where space is limited, the safety zones for bucket seats may be sized per ASTM and CPSC standards.

2.12.6 Climbing Equipment

2.12.6.1 Rungs or climbing bars shall be cylindrical, smooth, and sized per CPSC and ASTM guidelines.

2.12.6.2 Light colors (yellow, tan, or light gray) shall be used for plastic climbers, even in coastal areas. Other light colors may be considered at the discretion of Parks and Recreation Department Staff.

2.12.6.3 Climbing wall chains may be coated with a non-slip heavy duty coating.

2.12.6.4 Climbing boulders may be freestanding or attached to modular play equipment. The maximum height of climbing boulders shall be six feet above the playground safety surfacing unless surrounded by poured-in-place rubberized safety surfacing with a thickness sufficient to attenuate falls per ASTM F1292.

2.12.7 Slides

2.12.7.1 Free-standing and attached slides shall be single-piece units with plastic beds. Sectional slides and metal slides are not acceptable.

2.12.7.2 Light colors (yellow, tan, or light gray) shall be used for slide beds, even in coastal areas. Other light colors may be considered at the discretion of Parks and Recreation Department staff.

2.12.7.3 Stairways and ladders shall have continuous handrails on both sides and be placed at a height which will allow the child to stand erect over each step.

2.12.7.4 Slides shall be oriented facing north to northeast.

2.12.7.5 All slide exits shall be located in uncongested areas with a clear safety zone per ASTM and CPSC standards.

2.12.8 Spring Toys

2.12.8.1 Spring toy bodies shall be constructed of cast aluminum or heavy-duty plastic.

2.12.8.2 Spring toys shall be mounted on “C” spring bases or “non-pinching” coil springs only.

2.12.8.3 Minimize the placement of spring toys within poured-in-place rubberized safety surfacing areas; the constant movement deteriorates the safety surfacing.

2.12.9 Signage

2.12.9.1 A permanently mounted sign indicating age-appropriateness for each play area shall be set at the entrance to each play area. Verbiage shall notify users and parents/guardians that supervision is required for ages two to five years old, and recommended for ages five to twelve years old. Signage may be incorporated into each play structure as a panel.

2.12.9.2 A separate sign indicating park rules and regulations shall be posted in the immediate vicinity of the playground.

2.12.9.3 Unless smoking restrictions is noted on the park rules and regulations sign, a separate "No Smoking" sign shall be posted in the immediate vicinity of the playground.

2.12.10 Safety Zones

2.12.10.1 All safety zones set by the most current CPSC and ASTM guidelines takes precedence over safety zones noted in this Consultant's Guide.

2.12.10.2 Safety zones shall be shown on the plans. Safety zones shall maintain a minimum one-foot clearance from the perimeter of the playground.

2.12.10.3 Trees planted near playgrounds shall provide adequate clearance between play equipment and tree branches.

2.12.11 Inspections

2.12.11.1 Audit: At the completion of installation but prior to opening the playground to the public, the playground shall pass audit by a National Playground Safety Institute (NPSI) Certified Playground Safety Inspector (CPSI). See Layout and Construction Plans in Section 3 for additional information.

2.12.11.2 Head Impact Criteria (HIC) Test: At the completion of installation but prior to opening the playground to the public, poured-in-place rubberized playground safety surfacing shall be tested for impact attenuation in compliance with ASTM F1292. Testing shall be conducted by a technician certified by the manufacturer of the testing equipment used. Testing equipment shall be ASTM certified. Testing shall be done for each age group.

2.13 <u>OUTDOOR EXERCISE AREAS AND EQUIPMENT</u>

2.13.1 General

2.13.1.1 When requested by the community, outdoor exercise areas may be included in parks. Outdoor exercise areas and equipment shall offer a variety of activities to challenge all muscle groups of the body. Playgrounds and equipment shall meet the current requirements of the following:

- Americans with Disabilities Act (ADA)
- American Society for Testing and Materials (ASTM):

- Standard Specification for Unsupervised Public Use Outdoor Fitness Equipment (ASTM F3101)
- Standard Specification for Fitness Equipment (ASTM F2276)
- Standard Test Methods for Evaluating the Design and Performance Characteristics of Fitness Equipment (ASTM F2571)
- Standard Specification for Impact Attenuation of Surfacing Materials within the Use Zone of Playground Equipment (ASTM F1292)
- Standard Specification for Determination of Accessibility of Surface Systems Under and Around Playground Equipment (ASTM F1951)
- Standard Guide for Specification, Purchase, Installation and Maintenance of Poured-In-Place Playground Surfacing (ASTM F2479)

2.13.1.2 Outdoor exercise equipment may be grouped together in one area or distributed throughout a park to create an exercise course.

2.13.1.3 When exercise equipment is located in one area, group equipment requiring safety surfacing together to minimize the amount of safety surfacing required.

2.13.1.4 Outdoor exercise equipment shall be separate from playground equipment.

2.13.1.5 **Substitutions:** At the time of product submittals, any substitutions of equipment specified on construction plans must fit the designed area and be approved by Parks and Recreation Department Staff. Shop drawings or catalog cuts and a revised layout plan showing the substituted equipment and safety zones are required to determine acceptability of the substitution(s).

2.13.1.6 **Equipment Installation:** All equipment shall be installed in accordance with the manufacturer's specifications. The construction documents shall specify the equipment be installed as late in the construction process as possible.

2.13.1.7 **Product Availability:** Limit products to those readily available within the United States so replacement parts are more readily available.

2.13.2 **Surfacing:** Where the exercise equipment does not require the feet to leave the ground the surfacing shall be stabilized decomposed granite or concrete. Where the exercise equipment requires the feet to leave the ground the surfacing shall be poured-in-place rubber surfacing. See 2.11.4, Playground Safety Surfacing Materials for requirements.

2.13.2.1 **Poured-in-Place Rubberized Safety Surfacing:** Poured-in-place rubberized safety surfacing shall meet the requirements of CPSC and ASTM for play areas. All rubberized safety surfacing shall be installed on a concrete sub-base. Only aliphatic polyurethane binder shall be used in the color wear layer; aromatic polyurethane binder is not acceptable. The color wear layer shall be ½ inch to 5/8-inch-thick and may be EPDM (ethylene propylene diene monomer) or TPV (thermoplastic vulcanizate). The buffing layer (cushion layer) shall be of a thickness sufficient to attenuate falls per ASTM F1292, and may be SBR (styrene-butadiene rubber) or approved equal. A single color or color blend for the wear layer is preferred; do not use multiple colors to create shapes or patterns in the surfacing.

2.13.2.2 **Base for Rubberized Surfacing:** The concrete base for poured-in-place rubberized safety surfacing shall be Class 520-C-2500 concrete. The concrete base shall slope to a subsurface drainage system at 1% minimum. The subgrade shall be compacted to 90% minimum. Permeable concrete may be used if necessary to comply with storm water standards.

2.13.2.3 **Subsurface Drainage Systems:** A subsurface drainage system shall be provided for all exercise areas requiring poured-in-place rubber surfacing. The drainage system shall be designed for positive drainage to the site storm drainage system. The drainage system shall connect to the site drainage system at a catch basin when possible. If connection at a catch basin is not possible, a clean-out shall be provided at the connection directed toward the exercise area. Leach lines or sumps may be considered if a site storm drainage system is not available; leach lines or sumps must be approved by Parks and Recreation Department Staff. If sumps are used, locate them outside the exercise area whenever possible.

2.13.2.4 **Exercise Area Containment:** New exercise areas shall be contained by a minimum four-foot-wide concrete walkway when poured-in-place surfacing is required. The walkway shall maintain a continuous elevation around the perimeter. The walkway shall slope 1.5% away from the exercise area. Sand or engineered wood fiber shall be installed to the top of adjacent paving. Site grading shall direct run-off away from the exercise area. See Standard Park Details, Appendix D.

2.13.3 Signage

2.13.3.1 A permanently mounted sign indicating age-appropriateness for the equipment shall be set at the entrance to each exercise area.

2.13.3.2 Signage shall also provide instruction for proper usage of the exercise equipment as well as the muscles being used.

2.13.3.3 A separate sign indicating park rules and regulations shall be posted in the immediate vicinity of the exercise area.

2.13.3.4 Unless smoking restrictions is noted on the park rules and regulations sign, a separate "No Smoking" sign shall be posted in the immediate vicinity of the exercise area.

2.13.4 Inspections

2.13.4.1 **Inspection:** At the completion of installation but prior to opening the exercise area to the public, the exercise area shall be inspected by the manufacturer's representative to assure equipment has been installed per the manufacturer's specifications. The manufacturer's representative shall provide a compliance letter and warrantee certificate to the City.

2.13.4.2 **Head Impact Criteria (HIC) Test:** At the completion of installation but prior to opening the exercise area to the public, poured-in-place rubberized playground safety surfacing shall be tested for impact attenuation in compliance with ASTM F1292. Testing shall be conducted by a technician certified by the manufacturer of the testing equipment used. Testing equipment shall be ASTM certified. Testing shall be done for each exercise area.

2.14 PREFABRICATED PICNIC SHELTERS/SHADE SHELTERS

2.14.1 Prefabricated picnic shelters shall be all steel construction. The finish shall be an electrostatically applied powder coat. Roofs shall be standing metal seam or similar, with no exposed screws.

2.14.2 Fabric shade sails shall be manufactured locally such that replacement parts, including the fabric, shall be reasonably available for replacement. Posts shall be steel with a powder coat finish. Stainless steel rope shall be used for hanging and tensioning of the fabric cover.

2.14.3 All components of the picnic shelter/shade shelter shall have a ten-year warranty.

2.15 SPORTS COURTS

2.15.1 General: Sports courts shall be constructed of concrete. When possible and space permitting, basketball and volleyball courts shall be separate. When site constraints dictate, courts can be combined into multi-purpose courts. Paved multi-purpose courts can be plain concrete with a medium broom finish and painted striping or can have a colored sports surfacing applied over the concrete, with painted striping. In all instances the surfacing and striping shall be wear resistant and slip resistant. See Standard Park Details in Appendix D for layout and striping.

2.15.2 Basketball Courts

2.15.2.1 Basketball courts shall be a poured concrete surface, 104 feet by 70 feet in dimension, with a playing area of 84 feet by 50 feet. Half-court configurations and smaller configurations may be considered with approval from Parks and Recreation Department Staff.

2.15.2.2 Court construction and reinforcement shall be based on the geotechnical report. Rebar dowels and sleeves shall be provided at all cold joints.

2.15.2.3 The preferred court orientation is along a north-south axis.

2.15.2.4 The minimum distance between courts when two or more courts are side by side or end to end is ten feet.

2.15.2.5 Backboards shall be all steel with an emulsion type undercoat. Rectangular backboards are preferred. Extensions shall be galvanized steel, six feet in length. Rims shall be double rimmed with nylon nets. Poles shall be galvanized steel.

2.15.3 Paved Volleyball Courts

2.15.3.1 Paved volleyball courts shall be a poured concrete surface, 50 feet by 80 feet in dimension, with a playing area of 30 feet by 60 feet.

2.15.3.2 Court construction and reinforcement shall be based on the geotechnical report. Rebar dowels and sleeves shall be provided at all cold joints; all sleeves shall be greased.

2.15.3.3 The preferred court orientation is along a north-south axis.

2.15.3.4 When two courts are side by side, there shall be a minimum of ten feet between side lines. Courts placed end to end shall have a minimum distance of 15 feet between base lines.

2.15.3.5 All volleyball posts shall be galvanized. The net posts shall be eight feet above the finish playing surface. The net shall have a stainless-steel cable along the top and rope along the bottom. The posts and spacing shall accommodate a 32-foot-wide by three-foot-tall net.

2.15.4 Sand Volleyball Courts

2.15.4.1 Sand volleyball courts shall 50 feet by 90 feet with a playing area of 30 feet by 60 feet.

2.15.4.2 The sand shall be contained by a concrete curb, eight-inch minimum width, with a constant elevation around the perimeter of the court. Provide markings in the curb for the layout of the court rope.

2.15.4.3 Sand shall have a minimum depth of twelve inches at installation.

2.15.4.4 The preferred court orientation is along a north-south axis.

2.15.4.5 Sand for volleyball courts may be a clean washed silica sand (see Section 2.11, Playgrounds and Equipment) or may be clean washed plaster sand or "playground sand" with a sand equivalency (SE) of 65 and the following gradation:

Sieve Size	**Percent Passing**
#4 (4.75 mm)	100
#8 (2.36 mm)	90-100
#16 (1.18 mm)	70-90
#30 (600 um)	40-70
#50 (300 um)	20-40
#100 (150 um)	10-20
#200 (70 um)	0-10

2.15.4.6 A subsurface drainage system shall be provided that connects to the site drainage system. Leach lines or sumps may be considered if a storm drain is not available and if approved by Parks and Recreation Department Staff.

2.15.4.7 All volleyball posts shall be galvanized steel. The net post shall be eight feet above the finish playing surface. The net shall have a stainless-steel cable along the top and rope along the bottom. The posts and spacing shall accommodate a 32-foot-wide by three-foot-tall net.

2.15.5 Tennis Courts

2.15.5.1 Tennis courts shall be a poured concrete surface 60 feet by 120 feet in dimension, with a playing area of 36 feet by 78 feet. Where multiple courts are provided side by side, the following layouts may be considered: When space allows, the courts shall be the full dimensions noted above with a fence between (see Standard Park Details, Appendix D). Where space is limited, the courts may be separated by twelve feet at the side lines without fencing extensions between the courts.

2.15.5.2 Court construction and reinforcement shall be based on the geotechnical report. Score lines shall be provided per the geotechnical report to eliminate stress cracking in monolithic pours; score lines shall be saw cut. Rebar dowels and sleeves shall be provided at all cold joints; all sleeves shall be greased.

2.15.5.3 Court surface shall be a non-skid surface. The courts shall be striped for both singles and doubles play. Lines shall be painted two inches wide; except for the baseline which shall be painted four inches wide (see Standard Park Details, Appendix D).

2.15.5.4 The preferred orientation of the courts is along the long axis 22 degrees west of north.

2.15.5.5 Fencing shall be twelve feet high with chain link fabric installed on the court side of the posts. Fence posts, chain link, rails, and hardware shall be black 'thermally-fused poly-vinyl chloride'. Fine mesh wind screening shall be attached to the court side of the fence. Gates shall be located within the fence so as to not disrupt play on adjacent courts. San Diego Standard Drawings may not be used when wind screens are attached to the fencing; provide details and structural calculations when using wind screens.

2.16 <u>MULTI-PURPOSE FIELDS (SOFTBALL & SOCCER TURF AREAS)</u>

2.16.1 General: Multi-purpose fields may utilize Class "A", Class "B" or Class "C" topsoil per the Greenbook and Whitebook. Class "B" or Class "C" topsoil may be used when it can be amended to meet the requirements listed in the Greenbook for Class "A" topsoil. When the existing topsoil cannot be amended to meet the requirements of Class "A" topsoil, provide imported Class "A" topsoil per Greenbook and Whitebook specifications.

2.16.2 Softball Fields

2.16.2.1 Base length: 65 feet minimum

2.16.2.2 Foul Line distance: 250-foot radius minimum from home plate.

2.16.2.3 Home Plate to Backstop distance: 20 feet.

2.16.2.4 See Standard Park Details, Appendix D, for field layout.

2.16.2.5 Field Orientation: The preferred orientation places the batter facing the pitcher in a northerly direction with a line from home plate to the pitcher's mound not

deviating more than 20 degrees east or west of north. However, optimum utilization of the site may require deviation from the preferred orientation.

2.16.3 Softball Field Infield Mix: The softball field infield mix shall meet the following requirements:

Grain Size Distribution	**Percent Passing**	
Sieve Size	**Minimum**	**Maximum**
No. 4	100%	
No. 8	90%	100%
No. 16	85%	95%
No. 30	65%	85%
No. 50	35%	55%
No. 100	20%	35%
No. 200	10%	25%

2.16.3.1 Clay Content shall be 15 percent minimum.

2.16.3.2 Sand Equivalent shall be 15 to 25 percent, as per test method California Test 217 or ASTM D2419.

2.16.3.3 The pH range shall be 6.0 to 8.5.

2.16.3.4 Gold color is preferred. Red color is acceptable.

2.16.3.5 The minimum thickness of the Infield Mix shall be four inches.

2.16.4 Infield Dust Control: The method of infield dust control shall be as directed by Parks and Recreation Department Staff. Dust control may be accomplished in one or both of the following ways:

2.16.4.1 Provide two quick coupler valves in the turf area just beyond the perimeter of the infield. These valves shall be set at finish grade. If the park is being designed for recycled water use, the quick coupling valves shall be connected to a potable water supply with adequate backflow protection.

2.16.4.2 Provide a manually controlled system of high-speed rotors at the perimeter of the infield to wet the infield evenly and quickly. If the park is being designed for recycled water use, high speed rotors shall be connected to a potable water supply with adequate backflow protection.

2.16.5 Fencing and Backstop: Refer to the Standard Park Details in Appendix D for softball backstop construction. Deviation from these details requires approval from Parks and Recreation Department Staff.

2.16.6 Maintenance Access to Softball Field Lighting: Maintenance access to ball field lights shall be provided by concrete walkways designed for heavy equipment. See Section 2.4, Paving, Walkways and Mow Curbs.

2.16.7 Electrical Requirements: Verify need and location for an electrical outlet for the use of a pitching machine with Parks and Recreation Department Staff. The outlet may be located in a lockable stainless-steel box behind the backstop or backstop fence.

2.16.8 Softball Bleachers: Bleachers shall be hot dipped galvanized steel, three rows minimum or five rows typical and fifteen feet long. Bleachers with five rows require guardrails. Specify spot welding of seats and foot planks to the bleacher frame, free of burrs and sharp edges. Bleachers shall be placed a minimum of five feet from the fence line of the backstop. Provide accessible seating with bleacher seating.

2.16.9 Soccer Fields: The preferred size for soccer fields is 225 feet by 360 feet with a clear zone of nine feet on all sides. Multiple fields being placed adjacent to one another shall be placed side by side. Fields may be "off-set" to facilitate field layout but may not be end-to-end. The preferred orientation is with the long axis north-south. The field size may vary depending on site constraints; confirm the actual size with Parks and Recreation Department Staff. The playing surface shall not overlap onto the skinned infield of a softball field. The field area shall be free of drainage catch basins and manholes.

2.17 SITE AND SPORTS LIGHTING

2.17.1 General Design Requirements

2.17.1.1 Sports lighting shall be provided with its own electrical meter to take advantage of reduces rates.

2.17.1.2 Outdoor lighting shall comply with Municipal Code Section 142.0700 as well as other applicable state and local requirements.

2.17.1.3 Lighting and electrical plans and specifications shall be prepared by a State of California licensed Electrical Engineer.

2.17.1.4 Light fixture locations and plant locations shall be coordinated so that plants do not obscure the lights at maturity.

2.17.1.5 During the design phase of the project, the Consultant shall provide point to point drawings showing illumination levels of the playing surfaces, extending 150 feet beyond the playing surfaces in all directions. The point to point drawings will be used to verify the amount of spill lighting, or trespass light, outside the playing area.

2.17.1.6 Interior sports lighting systems shall consider the use natural light to minimize electricity use during the day. The Consultant shall evaluate gymnasium sports lighting systems including use of pulse start metal halide and multi-ballast florescent fixtures.

2.17.1.7 During the design of all lighting systems, the Consultant shall consider the merits of using occupancy sensors and lighting automatic lighting control systems to

switch lights. This includes but is not limited to automatic lighting controls, day lighting controls, and programmable lighting controllers to minimize energy consumption from lighting.

2.17.1.8 All lighting systems shall use internal reflectors and exterior louvers to reduce light pollution.

2.17.1.9 Underground conduit improvements shall be in Schedule 40 PVC pipe, minimum size of two inches. Above ground conduit improvements shall be in galvanized rigid steel pipe. When adjacent to a sidewalk, conduit shall be installed parallel to the sidewalk with adequate clearance from irrigation lines and other utilities.

2.17.1.10 Pull boxes for high voltage site and sports lighting shall be placed within concrete areas where possible. Pull boxes are required at each light standard when light standards are placed further than 50 feet apart. Pull boxes shall be concrete with a bolt-down cover.

2.17.1.11 Security light poles shall be concrete, aluminum or composite for durability. Standard steel poles are not acceptable.

2.17.1.12 All light poles shall be located in shrub beds and mulch areas whenever possible. When light poles are located in turf areas, they shall be adjacent to walkways with a concrete pad per San Diego Standard Drawings. If it is not feasible to locate light poles adjacent to walkways, light poles in turf areas shall have a concrete mow curb at the base per San Diego Standard Drawings.

2.17.1.13 All light fixtures shall be per the Approved Manufacturers and Products List, Appendix C, and the Standards and Specifications Guidelines from Facilities Division.

2.17.1.14 Light fixtures shall be LED. Security lights shall have a maximum color temperature of 4,000 Kelvin. Sports lights shall have a minimum color temperature of 4,000 Kelvin and a maximum color temperature of 5,000 Kelvin.

2.17.1.15 Light poles and irrigation head layout shall be coordinated to allow for full irrigation coverage and to avoid spraying poles.

2.17.1.16 Anchor bolts for light poles shall not be exposed. Anchor bolts shall be capped with concrete or shall have a composite shroud provided by the manufacturer.

2.17.1.17 A midget ferrule fuse shall be provided in the base of each light pole.

2.17.1.18 All outdoor lighting facilities shall be flush mounted and installed in lockable and vandal-proof enclosures.

2.17.1.19 The Lighting Consultant shall verify with the Project Manager the type of future lighting infrastructure to be provided for each project.

2.17.1.20 All U.P.S. and E.P.S. System and Programmable Lighting Panels shall have the following included with the Systems: All software need to change times or zones; Exterior Controller for Lighting Systems and Telephone Line Installed and Hook-up to Modem Provided in each system.

2.17.2 Security Lighting

2.17.2.1 All community and neighborhood parks shall be designed with security lighting along walkways and in parking areas. Security lights are to be mounted on building walls where possible. The minimum lighting level along all walkways and in parking areas shall be 0.5 foot-candles (fc), with a uniformity rate of six.

2.17.2.2 The fixtures shall have a Classification of Type I or cut-off per the Illumination Engineering Society (IES) standards. The refractor shall be U.V. stabilized prismatic acrylic or polycarbonate; glass is not acceptable. The mast-arm type shall be the slip-on type. Each fixture shall be individually switched by means of a twist-lock photocell. Lighting circuits shall be energized by means of a time clock so each system has the capability of being switched off at a pre-determined time.

2.17.3 Multi-Purpose Field and Court Lighting

2.17.3.1 Lighting shall meet the current IES standards and the skill level of the highest play activity that is being provided.

2.17.3.2 The design shall be prepared to use the least number of light fixtures and electrical energy required to provide the specified lighting intensities. Spill and glare shall be minimized.

2.17.3.3 Photometric data and lighting density calculations must be provided at plan check phase.

2.17.3.4 The electrical power to tennis court lighting and multi-purpose field lighting shall be independently metered by SDG&E.

2.17.3.5 Lighting levels, in foot-candles (fc):

Activity	**Horizontal Illumination**	**Uniformity**
Soccer:		
Recreational	20 fc	4:1 or less
Amateur	30 fc	3:1 or less
Softball:		
Infield	50 fc	2:1 or less
Outfield	30 fc	2.5:1 or less
Tennis Courts:	30 fc	4:1 or less
Basketball and Volleyball:	30 fc	3:1 or less
Swimming Pool Decks:	1 fc	4:1 or less

2.17.4 **Tennis Court and Multi-Purpose Court Light Switches:** Control of sports lighting shall be accomplished with an "on" button only, energized by a time clock, and time clock shall turn lights off after set time. Verify all court lighting

requirements with Parks and Recreation Department Staff. Each tennis court shall be lighted independently. Individual "On" buttons shall be located adjacent to each tennis court.

2.17.5 Multi-Purpose Field Light Switches

2.17.5.1 Provide a proprietary control system capable of turning the sports lighting on and off from a remote location based on user schedules. The control system shall be compatible with the lighting and electrical equipment provided.

2.17.6 Multi-Purpose Field and Court Light Pole Standards: Lighting Poles shall be a maximum height of 70 feet. Field lighting poles shall be located outside the fenced play areas.

2.18 <u>IRRIGATION SYSTEMS</u>

2.18.1 General Requirements

2.18.1.1 The irrigation system for turf areas shall be designed to achieve a Distribution Uniformity (DU) of 70 percent, or 0.70. To achieve this goal, the irrigation system shall be audited by an independent Certified Landscape Irrigation Auditor, certified by the Irrigation Association. Deficiencies shall be corrected prior to the start of the Plant Establishment Period. **<u>These requirements shall be included in the construction documents.</u>**

2.18.1.2 The irrigation system shall be designed utilizing water conservation standards and equipment. The irrigation design shall be based on accurate pressure information and produce an irrigation system which efficiently and uniformly applies water throughout the site. The irrigation design shall also have sufficient residual pressure and flow to accommodate site conditions, field changes, and unforeseen future demands as well as anticipated future demands, if it is a phased project.

2.18.1.3 Irrigation stations shall be hydro-zoned, labeled and coordinated with the irrigation controller.

2.18.1.4 For most parks there are two primary considerations: 1) To assure the irrigation design will meet the time constraints of the park's required operation needs; and 2) The system must be able to apply the volume of water necessary to achieve the evapotranspiration rate (ETO) for the highest demand month within a 32 hour per week watering "window." For parks with active sports fields it is critical the irrigation design is adequate to irrigate the site within the irrigation window and the recreational schedule of the sports fields. The irrigation design must be able to irrigate the complete site within one 8-hour irrigation window. This cycle must be able to apply the volume of water needed in a peak summer condition following two consecutive days of no water. A typical condition at most sport field complexes requires that the fields not receive irrigation on Friday or Saturday nights in preparation for community use on the following morning, and therefore the irrigation design must apply three days of irrigation in a single night. To carry overtime for this condition is NOT effective.

2.18.1.5 In developed areas the residual pressure shall be 15% and in undeveloped areas the residual pressure shall be 25% of the required operating pressure.

2.18.1.6 Irrigation circuits for ball fields shall be separated from other turf areas of the park.

2.18.1.7 Irrigation lines shall run horizontally (level and parallel to the slope contours) to minimize line drainage and pressure differentiation.

2.18.1.8 All irrigation equipment shall be installed per San Diego Standard Drawings unless otherwise noted or detailed on the construction drawings. Deviation from the San Diego Standard Drawings must be approved by the Parks and Recreation Department.

2.18.2 Recycled Water: The irrigation designer shall verify the need to design the irrigation system for recycled water use with the appropriate water district. All recycled irrigation systems shall be designed per the 'Rules and Regulations for Recycled Water Use and Distribution within the City of San Diego.'

2.18.2.1 Cross Connection Test Station: Shall be a cast brass or bronze ball valve, 3/4-inch female thread, installed in a concrete valve box with a cast iron locking lid.

2.18.2.2 Quick couplers and manually controlled high-speed rotor heads provided for softball field dust control identified in Section 2.14, Multi-Purpose Fields, shall be connected to a potable water supply with adequate backflow protection.

2.18.3 Irrigation Controllers

2.18.3.1 Irrigation systems shall be controlled by an automatic electrical controller.

2.18.3.2 Controllers shall be installed at locations approved by the Parks and Recreation Department. The preferred location is wall-mounted inside a Parks and Recreation storage room of a comfort station, recreation center or other permanent park building. When a comfort station, recreation center or other park building is not present, the controller(s) shall be installed in a controller enclosure located in a shrub or mulch area; do not install irrigation controller enclosures in turf areas.

2.18.3.3 When located inside a Parks and Recreation storage room or other acceptable space, the irrigation controller(s) shall be mounted on a pre-assembled controller backboard assembly.

2.18.3.4 When not located inside a permanent park building, irrigation controllers shall be installed in a vandal resistant, weather proof, stainless steel enclosure on a concrete pad.

2.18.3.5 Provide an automatic rain shut-off device in a vandal resistant enclosure for each controller or group of controllers. The rain shut-off device shall be located in an area subject to rainfall but out of the spray area for irrigation.

2.18.3.6 Consider the use of "smart controllers" during the design phase with the approval of Parks and Recreation Department. The use of Smart Controllers will address the

goal of water conservation design by having the capability of automatically shutting down systems when leaks, breaks, and shortages are detected.

2.18.4 Water Meter (Point of Connection): The maximum water meter size is two inches. If the irrigation system requires more than a two-inch meter, provide an additional water meter in a manifold or separate the irrigation system for two points of connection. Provide separate meters for irrigation and domestic (potable) uses.

2.18.5 Irrigation Booster Pump: When available water pressure is not adequate to meet the needs of the irrigation system as specified in 2.16.1 (4), an irrigation booster pump will be required. The irrigation booster pump shall be enclosed in a vandal resistant marine grade aluminum alloy enclosure on a concrete pad. All piping and wiring shall be concealed within the enclosure. Provide adequate clearance around the enclosure for maintenance.

2.18.6 Backflow Prevention: A reduced pressure principle backflow preventer is mandatory for irrigation systems using potable water per the Municipal Code. The installation shall include a stainless-steel enclosure (free of burrs and sharp edges) on a concrete pad. See San Diego Standard Drawings for backflow preventer installation. Backflow preventer enclosure installation shall be per the manufacturer's details and specifications.

2.18.7 Wye Strainer: Provide a brass or bronze wye strainer immediately downstream of the backflow preventer. The wye strainer shall be line size, sufficient to meet the demand of the irrigation system. The screen shall be 300 series stainless steel with a #40 mesh. Install the wye strainer below grade and/or in a manner to allow for draining in a concrete valve box with a locking cast iron cover. The wye strainer shall have an integral union or be installed with a separate PVC Schedule 80 union.

2.18.8 Pressure Regulating Valve: Provide a pressure regulating valve as required based on hydraulic calculations of the irrigation system. Specify the correct spring range (pressure range) for the pressure regulating valve. The pressure regulating valve shall be located below grade in a concrete valve box with a locking cast iron cover, immediately downstream of the backflow preventer and wye strainer. The pressure regulating valve shall have an integral union or be installed with a separate PVC Schedule 80 union.

2.18.9 Master Control Valve and Flow Sensor Device: Provide a 'normally open' master control valve immediately downstream of the backflow preventer, wye strainer and pressure regulating valve. The master control valve shall be wired independently to the master valve station of the irrigation controller. Provide a flow sensor located downstream of the master control valve, installed in a concrete valve box with a locking cast iron cover per manufacturer's specifications. All transitions from mainline depth to valve box depth shall be accomplished by the use of 45° couplings.

2.18.10 Isolation Valves

2.18.10.1 Provide isolation valves along the mainline at appropriate locations to divide the irrigation system into manageable units, at stub outs for future systems, prior to crossing large expanses of pavement, prior to crossing vehicular drives, at each remote-control valve or manifold, and for each quick coupler.

2.18.10.2 Isolation valves for remote control valve manifolds and quick couplers shall be bronze globe valves. Valves shall be the same size as the largest remote control valve on a manifold. Valves for quick couplers shall be one inch.

2.18.10.3 Isolation valves for main lines three inch and smaller shall be bronze globe valves. Isolation valves for main lines four-inch size and larger shall be cast iron or bronze gate valves. Isolation valves for main lines in a looped main line system design shall be cast iron or bronze gate valves.

2.18.11 Remote Control Valves: Remote control valves shall be of brass or bronze construction; plastic valves are not acceptable. The maximum remote-control valve size is two inches with a maximum pressure loss of five PSI. Remote control valves shall be installed in manifolds with a maximum four remote control valves per manifold. Install no more than one remote control valve per valve box. In multi-purpose fields, locate remote control valves along fence lines outside the field of play. All other remote-control valves shall be located in shrub or groundcover areas where possible.

2.18.12 Manual Control Valves: Manual control valves for use on manual irrigation systems and softball infield dust control systems shall be bronze globe valves.

2.18.13 Quick Coupler Valves: Quick couplers shall be one-inch size and constructed of brass or bronze, with a locking rubber or vinyl cover. Quick couplers shall be installed with their own one-inch size isolation valve. Provide quick couplers at a maximum spacing of 150 feet on center along main line routes. Locate quick couplers with remote control valve manifolds wherever possible. Provide quick couplers for softball infield dust control as indicated in Section 2.14, Multi-Purpose Fields. The minimum main line size for quick couplers shall be 1-1/2 inch. Quick coupler valves shall be installed in shrub or groundcover areas whenever possible, except as noted in Section 2.14, Multi-Purpose Fields, or as directed by the Parks and Recreation Department.

2.18.14 Irrigation Boxes: All irrigation boxes shall be concrete with a cast iron locking cover. The preferred location for irrigation boxes is in a shrub or groundcover area adjacent to a walkway. Irrigation boxes for remote control valves shall be set parallel to each other, and perpendicular to adjacent paving or concrete curb. The contractor shall paint the identification number (controller letter and valve number) of the valve box on the cover; control wire pull boxes shall be marked "PB"; larger isolation valves in valve boxes shall be marked "GV". The paint shall be white or yellow 100% acrylic epoxy waterproof paint.

2.18.15 Irrigation Heads

2.18.15.1 Coverage: Provide 100 percent (head to head) coverage for all areas irrigated with an overhead irrigation system. In larger turf areas where head spacing is 30 feet or greater, provide an additional 10 percent of overlap to allow for wind. Triangular spacing is preferred, where feasible.

2.18.15.2 The irrigation system shall be designed for the optimal operating pressure of the irrigation head(s) specified.

2.18.15.3 All irrigation heads shall be installed and adjusted to avoid overspray onto buildings, walkways, streets, play equipment, or other improvements.

2.18.15.4 All pop-up type irrigation heads shall have an internal anti-drain valve capable of holding back a minimum of twelve vertical feet of head pressure. All fixed riser type irrigation heads shall be equipped with an anti-drain valve located in the riser assembly per San Diego Standard Drawings. Additional in-line anti-drain valves may be required based on site conditions and irrigation system design.

2.18.15.5 Irrigation heads in "accessible areas" prone to vandalism or accidental breakage shall be pop-up heads. This includes irrigation heads directly adjacent to walkways, curbs, parking areas, turf or pedestrian and maintenance vehicle accessible areas. Alternatively, accessible areas can also be designed with drip or a compacted gravel surface.

2.18.15.6 All sprinkler heads in turf areas shall be pop-up type with a minimum pop-up height of four inches.

2.18.15.7 Pop-up heads shall have a six inch or twelve-inch riser height depending on the adjacent shrubs or groundcover. Fixed riser heads shall be on twelve-inch-high risers and provided only in areas approved by Parks and Recreation Department Staff.

2.18.15.8 All pop-up type stream rotor heads for permanent irrigation systems shall have stainless steel risers and a five-year manufacturer's warranty. Stream rotors used for temporary irrigation systems may have plastic risers with prior approval of Parks and Recreation Department Staff.

2.18.15.9 Provide a separate bubbler system for trees, with two bubblers per tree. Bubblers shall be pressure compensating with a fixed flow rate; adjustable flow bubblers are not acceptable. One bubbler shall be a deep root bubbler per San Diego Standard Drawings and the other bubbler shall be on a two-inch pop-up body. The pop-up bubbler shall be located on the uphill side of the root ball.

2.18.16 Drip Irrigation

2.18.16.1 Drip irrigation systems may be used with express approval of Parks and Recreation Department Staff.

2.18.16.2 Drip irrigation materials must be approved in advance by Parks and Recreation Department Staff prior to design of the irrigation system.

2.18.16.3 Drip irrigation remote control valves shall be brass construction.

2.18.16.4 Drip irrigation filters and pressure regulators shall be a combined unit such that the entire drip valve assembly fits within a standard concrete valve box with cast iron hinged locking cover.

2.18.16.5 In-line drip irrigation tubing is preferred over individual emitters and "spaghetti tubing" to each plant.

2.18.16.6 Irrigation plans for drip irrigation tubing shall include the drip valve assembly, supply headers, exhaust headers, air relief valves and flush valves as required for proper construction. Diagrammatic irrigation system design is not acceptable.

2.18.17 Trenching

2.18.17.1 No shared use of trenches will be allowed between various trades and for incompatible uses. Pipes shall not be installed directly over one another.

2.18.17.2 All main line and lateral line pipe shall be encased with SE 50 plaster or mortar sand.

2.18.17.3 Warning tapes for irrigation main lines and low voltage control wires shall be a minimum of three inches wide and shall run continuously for the entire length of all main line piping and wire. In a trench containing both main line and low voltage control wire, both trench marker tapes shall be installed side by side.

2.18.18 Piping

2.18.18.1 All systems shall be designed to operate at a water velocity not to exceed five feet per second (fps).

2.18.18.2 Pressure Mainline Pipe:

- 1-1/2 inch diameter shall be Schedule 40 PVC pipe (1-1/2 inch minimum size) with Schedule 40 fittings.
- Two-inch diameter and larger shall be Class 315 PVC pipe with Schedule 80 fittings.

2.18.18.3 Non-Pressure Lateral Pipe: Shall be Schedule 40 PVC pipe with Schedule 40 fittings. All end runs, regardless of head type, shall be 3/4-inch size minimum or one inch if the sprinkler head inlet is one inch.

2.18.18.4 On-Grade Pipe: On-grade piping is only allowed with Parks and Recreation Department approval. On-grade pipe shall be galvanized iron pipe (GIP) or UV stabilized PVC pipe with gauges as noted above.

2.18.19 Sleeving

2.18.19.1 Sleeving is required for all irrigation pipe and electrical lines below paving. Sleeves shall extend a minimum of twelve inches beyond the paved surface above. A pull box shall be provided at each end of sleeves crossing streets or driveways.

2.18.19.2 All sleeves for irrigation lines shall be Schedule 40 PVC pipe sized two times the diameter of the pipe to be enclosed, two-inch minimum size.

2.18.19.3 All sleeves for electrical lines shall be Schedule 40 PVC pipe two times the diameter of the wire bundle to be enclosed, two-inch minimum size. Where irrigation water lines cross under paving the letter 'W' shall be stamped or chiseled on the pavement or curb directly above the sleeve on both ends. Where electrical lines cross under paving the letter 'E' shall be stamped or chiseled on

the pavement or curb directly above the sleeve on both ends. Where a sleeve is installed for future usage, mark pavement with an "S."

2.18.20 Wiring

2.18.20.1 A minimum of two (2) spare control wires shall be run along each mainline branch to the furthest valve manifold. Bundle and tape four feet of additional wire and install in the last valve box on each mainline run. Loop the spare wires into one valve box for each manifold along that mainline run.

2.18.20.2 All control wires shall be color coded per the City of San Diego "Whitebook" supplement to the Greenbook.

2.18.20.3 No splices will be allowed on runs of less than 300 feet. All splices are to be made with an approved splice unit, soldered, and installed in a concrete pull box.

2.19 <u>PLANTING</u>

2.19.1 General Requirements

2.19.1.1 Planting Design shall be appropriate for the site and climate conditions and shall enhance the park site and the park user's experience. See Council Policy No. 200-14, Park and Recreation Facility Landscape Design.

2.19.1.2 All planting shall be located to permit the proper operation of irrigation systems and the effective use of mechanized maintenance equipment. Plant locations and spacing shall permit normal plant development without undue crowding or trimming. Plant spacing should be set to the mature width of the plant. Shrubs, groundcover, and vines shall be spaced a minimum of one half of their mature diameter from all walkways. Planting in groupings will allow for more effective maintenance. Planting shall be grouped by hydrozone.

2.19.1.3 As a minimum, all manufactured slopes shall be revegetated in compliance with Municipal Code Section 142.0400, Table 142-04F.

2.19.1.4 Brush Management: All areas requiring brush management shall be designed per the City-Wide Landscape Regulations (Municipal Code § 142.0412).

2.19.1.5 All parking areas shall provide a minimum of five percent of the parking area as landscaping. Within the parking area, one 24-inch box tree shall be provided within 30 feet of each parking space. The required trees shall be located in a minimum of 40 square feet of landscape area. Parking areas adjacent to public rights-of-way shall provide a 30-inch-high screen. Plants may be used to screen the parking area if the plants selected will provide a 30-inch-high screen within two years. Curbs (six-inch minimum height) are required to protect all landscape areas within parking areas (Municipal Code § 142.0406).

2.19.1.6 Trees planted in turf areas shall be spaced to permit the most effective use of mechanized maintenance equipment and operation of the irrigation system. Trees planted in turf areas shall have a minimum of twelve horizontal feet between trees and other vertical objects. For all trees installed in turf areas,

provide a four-foot diameter mulched area around the base of the tree; there shall be no mulch on crown of tree. Dense tree groves shall not be planted in turf areas.

2.19.1.7 Ornamental shrub beds in parks and around park buildings may be provided with approval from Parks and Recreation Department Staff. Shrubs and vines adjacent to building walls shall have a mature height that preserves visual access. Provide a three-inch layer of mulch in all shrub areas.

2.19.1.8 Groundcover shall be planted with triangular spacing at a distance that will typically ensure 100 percent coverage within one year of installation.

2.19.1.9 Turf shall be used for passive and active recreational uses. Turf areas shall be of a size and configuration to permit the most effective use of mechanized maintenance equipment and reduce edging. Small decorative turf areas are not permitted.

2.19.1.10 Mulch shall be used to retain soil moisture and deter weed growth. All shrub and groundcover areas shall have a three-inch minimum layer of mulch. All non-planted areas shall be covered with a four-inch minimum layer of mulch.

2.19.1.11 Plant material used adjacent to coastal bluffs shall be native or naturalized to minimize the need for irrigation beyond initial plant establishment. Existing plant materials that require supplemental irrigation should be removed and replaced with native or naturalized plant material.

2.19.2 Plant Selection

2.19.2.1 Plant selection shall be consistent with Council Policy No. 200-14, Park and Recreation Facility Landscape Design. The use of drought tolerant and/or native plant material that is particularly compatible with our local environment is encouraged to promote water conservation and reduce maintenance costs.

2.19.2.2 Select only those species which are considered relatively disease and pest-free and require minimal trimming to be maintained in a safe and attractive condition. The Parks and Recreation Department retains the right to prohibit any plant material generally known to require excessive maintenance due to factors such as, but not limited to, disease, pest control, troublesome root development, ultimate size, and difficult growth habits.

2.19.2.3 Select plants with similar water requirements. Plants shall be compatible according to the Water Use Classification of Landscape Species IV (WUCOLS IV).

2.19.2.4 Trees shall be selected to provide a succession of growth, enhance the uniqueness of the site and provide shade and seasonal interest. To provide a succession of growth, an even mix of fast growing and slow growing trees shall be provided, i.e. mix of Acacia trees with Oak trees. To enhance the uniqueness of the site, tree species shall be selected that create a sense of place, i.e. Palm trees at beach locations or Sycamore trees for inland areas. To provide shade and seasonal interest, a mix of evergreen and deciduous trees should be provided. Washingtonia robusta palms should not be used.

2.19.2.5 The preferred turf species should be warm season type and stays green throughout the year. Consult with Parks and Recreation Department Staff for the appropriate turf species per site conditions and use. Rate of application shall be determined by the type of turf species.

2.19.2.6 All non-irrigated seed mixes shall be installed between the months of October and February only.

2.19.2.7 The American Society of Landscape Architects (ASLA) and the California Native Plant Society (CNPS) have prepared the Invasive Ornamental Plant Guide, listing plant materials that are considered to be invasive. Two lists are available; one listing "most invasive" species and one listing "moderately invasive" species. The Invasive Ornamental Plant Guide may be found at **http://www.asla-sandiego.org**. Plants found on the "most invasive" list shall not be used in any City parks without approval of Parks and Recreation Department Staff. Plants found on the "moderately invasive" list shall not be used in City parks adjacent to open space areas or multi-habitat planning areas. See Appendix F for additional information.

2.19.3 Installation Criteria

2.19.3.1 At the start of the design process the consultant shall obtain an agricultural suitability soil test on the site soil and incorporate the results and recommendations into the construction plans and specifications. The test results shall determine the type and rate of soil amendments, leaching requirements, and post-installation maintenance requirements. Soil testing during construction shall be per the "Whitebook" and shall be the responsibility of the Contractor.

2.19.3.2 Trees shall be staked per San Diego Standard Drawings.

2.19.3.3 Trees located within ten feet of walkways or other surface improvements shall be installed with root barriers adjacent to the walkway or surface improvement; do not install root barriers around the root ball. The length of the root barrier shall be a minimum of ten feet from the center of the trunk in both directions of the tree. Root barriers shall be made of a rib system, polypropylene material with a minimum thickness of 0.08 inch and a minimum depth of 24 inches.

2.19.3.4 Tree grates shall be cast iron or steel with expandable center openings and must meet current ADA requirements. Concrete tree grates are not acceptable. The minimum size for tree grates shall be 40 square feet per Municipal Code requirements.

2.19.3.5 Turf planted from seed or stolon shall have a 120-calendar day plant establishment period. Turf planted from sod shall have a 90-calendar day plant establishment period.

2.20 PERMANENT BEST MANAGEMENT PRACTICES (GREEN INFRASTRUCTURE)

2.20.1 General: Permanent Best Management Practices (BMP) design, also known as green infrastructure, structural BMP's or storm water facilities, are to adhere to the most current City of San Diego Storm Water Manual design standards. These can include bio-filtration basins and bio-retention basins.

2.20.2 Park installation must adhere to the current storm water standards identified in the most recent manual: https://www.sandiego.gov/sites/default/files/storm_water_standards_manual_oct_2018.pdf

2.20.3 Provide a permanent irrigation system for all vegetated BMPs. The plantings shall be irrigated with a low flow bubbler system using flexible poly tubing set below the cobble.

2.20.4 Locate all main line and valves outside the BMP. Irrigation system design shall be per section 2.17, Irrigation.

2.20.5 Trees shall be located outside the BMP. Avoid deciduous or messy trees that will increase maintenance of the BMPs.

2.20.6 Do not plant deciduous or messy trees near the basin. Deciduous trees increase the maintenance required to keep basins free of debris.

2.20.7 Permanent vegetated BMPs are to be planted with suitable species from container stock; hydroseeding is not acceptable. Planting shall be limited to approximately 15 percent (15%) of the basin.

2.20.8 Stormwater basins shall be vegetated with appropriate plant species from the Plant List for Bioretention/Biofiltration BMPs, Appendix E of the Storm Water Standards Manual.

2.20.9 The entire basin shall have a layer of cobblestone with a minimum size of four inches (4").

2.20.10 Do not plant trees within the basin or the slopes. Trees may become habitat and could interfere with required stormwater maintenance.

2.20.11 Pesticide Usage: The calculations for pollutant uptake by filtration media must take into account the increased levels of chemicals. These calculations must be included in the SWQMP (storm water technical report). The use of pesticides will be applied by qualified City staff or contractors within BMPs. Qualified personnel must have a Qualified Applicator Certificate by the State of California for pesticide usage.

2.21 SYNTHETIC TURF

2.21.1 Application: Synthetic turf systems may be considered for use in public park facilities when intended for permitted, active sports-related recreational activities or to replace small, high use natural turf areas that are difficult to maintain as determined by the Park and Recreation Director. The Project Manager and Consultant must consider the life expectancy of the synthetic turf and timing to identify a funding source for replacement (usually after 10 to 15 years).

2.21.2 Joint Use Areas: Synthetic turf may be considered for use in joint use facilities where the proposed turf area is 1.5 acres in size or smaller and shall meet all the installation criteria listed herein unless approved otherwise by the Park and Recreation Director and the participating joint use partner. Joint use facilities may not be subject to

permitted use only criteria identified in 2.18.1, Application; they may be open to the public per the conditions stated in the joint use agreement for that particular site.

2.21.3 Special Use Permit and Leasehold Areas: Synthetic turf may be considered for use on city parkland when requested by organizations holding a Special Use Permit or long-term lease agreement with the City. Upon approval by the City, the organization requesting the use of synthetic turf shall agree to adhere to the installation criteria herein and shall provide all necessary funding to install, maintain, and eventually replace the synthetic turf to the City's satisfaction.

2.21.4 Installation Criteria:

2.21.4.1 The synthetic turf system for athletic fields shall use silica sand infill, synthetic infill or organic infill with a subterranean drainage system sufficient to allow the playing surface to drain quickly.

2.21.4.2 The synthetic turf system shall use a shock pad beneath the artificial turf layer to attenuate falls.

2.21.4.3 The manufacturer shall have local or regional representation capable of performing repairs and providing maintenance advice in a timely manner.

2.21.4.4 Synthetic turf fields intended for multi-use shall not incorporate game striping or skinned infields to allow flexibility in use. Using alternate synthetic turf colors to delineate infields, running tracks or other uses will be reviewed and approved on a case by case basis by the Parks and Recreation Director. Only City approved field marking paint or systems shall be allowed.

2.21.4.5 All components of the synthetic turf system shall meet or exceed relevant federal, state, and local health requirements. Manufacturers shall be required to fully disclose all materials used in the manufacture of the synthetic turf system and provide complete information on all potentially toxic constituents.

2.21.4.6 The project specifications for a synthetic turf system shall include provisions to secure the necessary equipment and training to properly maintain the synthetic turf system according to the manufacturer's recommendations and warranty requirements.

2.21.4.7 A synthetic turf facility for sports related activities shall be by permit only, unless otherwise supervised by City staff, and shall be designed to be secured when not in use.

2.21.4.8 Signs shall be posted with user health and safety guidelines at all synthetic turf fields. These signs shall include, but not be limited to, advising users how to recognize heat-related illnesses and the proper steps to take to moderate and treat such illnesses, emphasize good hygiene such as washing hands after playing and practicing, and standard first aid for skin wounds to prevent infections.

2.21.4.9 Signs shall be posted to indicate which activities are allowed and not allowed on the synthetic turf. These signs shall address, but not be limited to, items such as food, drinks, pets, and certain types of chairs, umbrellas, athletic shoes and

athletic equipment which may damage the turf and invalidate the manufacturer's warranty or shorten the product's life expectancy.

2.21.4.10 Sun shade and drinking fountains shall be provided near the synthetic turf field. Where shade and/or drinking fountains cannot be provided due to design or site constraints, efforts shall be taken to encourage users to provide acceptable portable shade systems and drinking water.

2.21.4.11 Each synthetic turf installation shall include a water system including quick coupling valves to assist in the proper maintenance of the system. Water shall not be used to cool the synthetic turf playing surface.

2.21.4.12 The recyclability of the synthetic turf and infill components shall be considered when selecting the synthetic turf type to assure the materials can be recycled at the end of the useful life.

2.21.4.13 Synthetic turf fields shall not be installed in flood prone areas due to potential damage to the turf and possible dissemination of synthetic turf materials, such as the infill material, into storm drains or natural drainage courses.

2.21.4.14 The City's Transportation and Storm Water Department shall review the proposed synthetic turf system during the project's design phase.

2.21.4.15 When possible, prior to installation of the synthetic turf system, the City shall identify a funding source for the replacement of the synthetic turf at the end of its life expectancy. The funding source shall include the costs for recycling and/or legal disposal of removed synthetic turf components.

2.21.4.16 Synthetic turf may be considered for smaller areas other than athletic fields where the extensive use causes soil compaction and makes natural turf difficult to maintain, such as adjacent to playgrounds or other high use passive areas. In these smaller areas, synthetic turf systems that do not use an infill and are not designed for athletic use may be considered.

2.22 REQUIREMENTS AND STANDARDS FOR ALL BUILDINGS

2.22.1 Sustainable Buildings: Building design and construction shall comply with City Council Policy No. 900-14, Sustainable Building Policy.

2.22.2 Facilities Maintenance Division Standards: Unless specifically noted in this Consultant's Guide, all new and retrofitted buildings shall meet the most current *Standards and Specifications Guidelines from Facilities Division*. The consultant shall obtain the most current version from the Project Manager.

2.22.3 Building Colors: Building colors shall be selected by the Consultant and approved by the Parks and Recreation Department. Buildings in Mission Bay Park must use the approved Mission Bay Colors (see Appendix C).

2.22.4 Toilets, Urinals, and Sinks: Fixtures shall be wall hung and of heavy-duty stainless-steel construction (penal quality). Porcelain fixtures may be used in recreation centers and similar facilities upon approval by the Parks and Recreation Department. Sinks in recreation centers, aquatic facilities and similar use buildings shall be

plumbed for tempered water. Sinks in comfort stations shall be plumbed for cold water only.

2.22.5 Toilet Paper Dispensers: Shall be provided in each stall and shall be anti-theft multi-roll with two or more roll storage capacity. Provide Aslin Industries 3-roll model with the Type C slow rolling bar. Other models may be used to meet ADA requirements; however, the Aslin Industries model should also be provided in ADA compliant stalls for increased capacity.

2.22.6 Soap Dispensers: Provide at least one wall mounted soap dispenser in each restroom.

2.22.7 Electric Hand Dryer: Provide at least one electric hand dryer in each restroom. Remove the heating element from dryer.

2.22.8 Exterior Building Lights: Exterior building lights shall be surface mounted. All exterior doors shall have a surface mounted light above the door. Exterior building lights shall have a minimum clearance of seven feet from grade.

2.22.9 Recessed Ground Lights: Lights recessed in paving or landscaping are discouraged due to potential vandalism and water damage. If the design requires recessed ground lights they shall be Hydrel fixtures or approved equal.

2.22.10 Electrical Outlets for Beverage Machines: Provide a 110/120-volt duplex receptacle on a separate 20 ampere circuit on the exterior of each building for beverage machines. Provide a concrete pad large enough to accommodate two beverage machines side-by-side with adequate circulation space to meet ADA requirements. Locations shall be approved by Parks and Recreation Department Staff.

2.22.11 Bird-proofing: Design buildings and eaves to discourage bird nesting. Any openings where birds can nest shall be protected with netting or other appropriate materials.

2.22.12 Partition Walls: Masonry building partition walls that are not full height (floor to ceiling) shall have a rounded mortar cap to prevent objects from being placed or hidden on top.

2.22.13 Eye Wash Stations: All buildings, including but not limited to recreation centers, pool houses, restrooms, community buildings and maintenance facilities shall have eye wash stations per ANSI Z358.1-2009.

2.23 COMFORT STATIONS

2.23.1 Comfort stations may be designed in one of two styles: as a traditional arrangement with a Men's restroom and a Women's restroom, or as a collection of individual single-occupancy, gender-neutral stalls. The style used shall be at the direction of Parks and Recreation Department Staff, with a preference toward the gender-neutral configuration of individual use stalls and outdoor sinks.

2.23.2 Regardless of the style, each restroom building may include an electrical room for SDG&E, a plumbing chase, a Parks and Recreation storage room, a community storage room, and a concession stand room if located adjacent to sports fields. Comfort stations shall include the following specific requirements:

2.23.3 Building Design: The building design and materials shall harmonize with the design of the park's theme or natural character. The building shall be designed to facilitate natural air ventilation. If an exterior privacy wall is needed at the entries to the comfort station, the wall should be no larger than necessary and shall not be L-shaped. The entrance to the comfort station shall face the main area of activity. The plumbing chase shall be accessed from the exterior of the building and not from a storage room or from the restrooms.

2.23.4 Fixtures: All plumbing fixtures shall be located on a common wall with the plumbing chase on the opposite side. Fixtures shall be penal quality heavy-duty stainless steel.

2.23.5 Floors: Floors shall be a reinforced concrete slab and foundation. Foundations shall not interfere with sewer lines. Floors shall slope to the building's drainage. Floors shall have a vapor barrier beneath. Provide a concrete sealer for the floors.

2.23.6 Floor Drains: The restroom floor shall slope to area drains. Do not use trench drains.

2.23.7 Walls: All walls shall be reinforced, solid grouted concrete block masonry. All walls shall be treated with an anti-graffiti coating inside and outside, including the ceiling of the comfort station. Anti-graffiti coating shall be per Appendix C.

2.23.8 Roofs: See Facilities Maintenance Division Standards for roofing requirements. Roofing shall complement the building and shall harmonize with the design of the park's theme or natural character.

2.23.9 Exterior Doors and Frames: Frames shall be steel with heavy duty door hardware. The exterior door to the electrical or plumbing chase room shall be a single door with louvers. Exterior doors to storage rooms shall be double doors with removable center mullions. Exterior doors to restrooms may be a tubular steel gate.

2.23.10 Men's, Women's, and Gender-Neutral Signage: Provide signage with the international symbol for accessibility as required.

2.23.11 Plumbing and Electrical Chase: Plumbing pipes and electrical conduit shall be exposed and secured to the wall in a 2 foot-6 inches minimum width plumbing chase. Provide one exterior loose key hose bibb at the front of the building. Provide an electrical outlet in the plumbing chase. The plumbing and electrical pipes shall not prevent maintenance access throughout.

2.23.12 Lighting: Light fixtures shall be vandal resistant and mounted a minimum of seven feet above the floor or finish grade (measured to the bottom of the light fixture). LED lighting is preferred. For traditional style restrooms, provide at least two fixtures in each restroom and one fixture in the plumbing chase. Provide one light fixture per stall for single occupancy restrooms. Interior lights shall be on a separate circuit from the exterior lights. Interior lights shall be operated by a timer located in the plumbing chase or Parks and Recreation storage room. Exterior lights shall be operated by photo cell.

2.23.13 Interior Stall Doors and Partitions: Shall be one-inch thick solid plastic (HDPE). Hardware for stalls shall be heavy duty stainless steel or aluminum; Zamac (pot metal) hardware is not acceptable. The color and finish of interior doors and partitions shall be selected by the Consultant and approved by the Parks and

Recreation Department. Darker colors are preferred to deter graffiti. Partition walls may also be constructed using concrete masonry units.

2.23.14 Dressing Rooms and Showers: Provide at beach areas only. Showers shall be provided on the exterior of the building. Install at least two lights in each of these areas.

2.23.15 Storage Room: Provide a storage room for toiletries and cleaning supplies. Storage rooms shall be properly ventilated and protected from floor moisture. Provide an electrical outlet and lighting in the Parks and Recreation storage room. Provide additional space for grounds maintenance storage when requested by Parks and Recreation staff.

2.23.16 Concession Stand Room: For parks with league activities, a concession stand room shall be provided with a 100-ampere electrical panel, electrical outlets, and lights. Each outlet shall be on separate circuit. Provide potable water, a service window and other components as determined by the Parks and Recreation Department. Concession stand rooms shall meet County Department of Environmental Health requirements for the intended use.

2.23.17 Traditional Restrooms: Include the following for traditional style restrooms

2.23.17.1 A minimum of two water closets for each side.

2.23.17.2 A minimum of one urinal for the Men's restroom.

2.23.17.3 A minimum of two lavatories for each side.

2.23.17.4 A minimum of one soap dispenser for each side.

2.23.17.5 A minimum of one hand dryer for each side.

2.23.17.6 One diaper changing station for each side.

2.23.18 Single-Occupancy Restrooms: Include the following for single occupancy restrooms:

2.23.18.1 A minimum of one family designated stall.

2.23.18.2 A minimum of two water closets.

2.23.18.3 A common hand washing station with a minimum of two lavatories located outside under a roof overhang so as to avoid rainwater entering the sewer system.

2.23.18.4 A minimum of one soap dispenser.

2.23.18.5 A minimum of one hand dryer.

2.23.18.6 A diaper changing station (located in the family designated stall).

2.23.18.7 Doors shall have a six inch (6") minimum gap at the bottom for security monitoring.

2.23.18.8 Doors shall be secured with a one-sided ADA compliant deadbolt lock or ADA compliant locking door lever with an exterior display that reads "In Use" in red and "Vacant" in green. Doors shall also be able to be secured using City standard keying system (See Facilities Maintenance Guide Specifications).

2.24 RECREATION CENTERS

2.24.1 **General**: These facilities may include a lobby with a reception counter, offices for at least three staff members, a gymnasium, multi-purpose rooms, a kitchen (to provide warming of food only), a large storage room for athletic equipment with access from outside and inside, small storage rooms for maintenance equipment, a set of restrooms near the lobby and one set in the back of the building, and an electrical room.

2.24.2 **Building Design:** The building design, location and materials shall harmonize with the park's theme or natural character. The building entry shall be visible from the public street and communicate public pride. It is preferred that the parking area(s) be provided on the side(s) of the building to maintain the view of the building entrance.

2.24.3 **Acoustic Insulation:** Rooms used for loud activities shall be acoustically insulated.

2.24.4 **Exterior Doors:** Shall be hollow metal and provided with thresholds. Keying requirements shall be per Standards and Specifications Guidelines from Facilities Division.

2.24.5 **Interior Stall Doors and Partitions:** Shall be one-inch thick stainless steel or solid plastic. Acceptable hardware for stalls shall be heavy duty stainless steel or aluminum; Zamac (pot metal) hardware is not acceptable. The color and finish of interior doors and partitions shall be selected by the Consultant and approved by Parks and Recreation Department Staff.

2.24.6 **Interior Lighting:** Provide vandal resistant lighting mounted a minimum of seven feet above finish floor in all public areas (measured to the bottom of the light fixture). Lighting shall be electrical ballast type and designed to minimize electrical energy use.

2.24.7 **Interior Doors and Hardware:** Shall be wide enough to allow easy installation and removal of equipment or furniture in the rooms. Double doors with exit hardware shall be used with removable center mullion. Provide standard 3 foot by 7 foot by 1-3/4-inch-thick doors installed with heavy duty hardware. Closers are to be mounted with through bolts. Provide stainless steel hardware in coastal areas.

2.24.8 **Roofs:** Heating, ventilating and air conditioning equipment shall not be roof mounted. Roofs and exterior walls shall have thermal insulation.

2.24.9 **Gymnasium Rooms:** Rooms with wood floors shall not contain drinking fountains or other water sources. Minimize protrusions, including door knobs, in high speed play areas. Wall vents in these rooms shall be located such that malfunctioning irrigation heads or wind driven rain cannot damage the floor. The floor design shall provide air circulation below the floor. All gymnasium floor designs shall include game striping plans.

2.24.10 Gymnasium Scoreboards: Shall have a hinged polycarbonate protective cover installed to prevent damage from balls.

2.24.11 Security Alarm Systems: Shall be specified where necessary. Consult Project Manager for acceptable types and necessary locations.

2.24.12 Fire Sprinkler System: Shall be per applicable Building Codes.

2.24.13 Ceiling Height: The ceiling height of each room shall be sufficient for the activities intended. Ceiling height should take into consideration and suspended lighting, ventilation, fire sprinkler systems and other building systems.

2.25 AQUATICS FACILITIES

2.25.1 General: Specific facilities and site detailing shall be coordinated with the Parks and Recreation Department Aquatics Program and Aquatics Maintenance Staff. The standards listed below are minimum requirements. Consult the Americans with Disabilities Act Accessibility Guidelines, California Health and Safety Code, California Code of Regulations, California Building Code, and California Electrical Code in the design of swimming pool facilities.

2.25.2 Buildings: Pool buildings shall contain a reception desk, staff offices, a pool manager office, a staff restroom/shower, a first aid room, a meeting/training room, locker rooms/restrooms, a family changing room, a pool supplies storage room, outdoor showers, a mechanical room, and an electrical room.

2.25.2.1 Reception Desk: Provide a reception desk at the main facility entrance separate from staff offices.

2.25.2.2 Staff Offices: Provide a central office space with room for four staff members and desks, a copier, water cooler and other usual office equipment. Provide built-in storage for office supplies, forms, records and other materials. The staff office shall be connected directly to the pool deck area.

2.25.2.3 Pool Manager's Office: Provide a separate pool manager's office with a direct view of the pool area. The pool manager's office shall be directly connected to the main office.

2.25.2.4 Staff Facilities: Provide a separate restroom with shower facilities for staff directly connected to the main office.

2.25.2.5 First Aid Room: Provide a first aid room with an entrance off the pool deck. Provide a sink with a sensor activated faucet and soap dispenser to minimize contamination. Provide an electric hand dryer with the heat element removed.

2.25.2.6 Meeting/Training Room: Provide a meeting and training room approximately 300 square feet in size.

2.25.2.7 Locker Rooms/Restrooms: Provide separate locker rooms with restrooms for men and women, with the entrances clearly differentiated. Provide the following minimum facilities:

- Four showers per side, plumbed for tempered water, with one soap dispenser per shower.
- Four toilets per side with one multi-roll, anti-theft toilet paper dispenser and one toilet seat cover dispenser per stall.
- Four restroom sinks each side, plumbed for tempered water, with sensor activated faucets and soap dispensers to minimize contamination.
- Twenty lockers per side, constructed of solid high-density polyethylene (HDPE) with padlock hasps.
- Benches to seat twenty people, constructed of non-corrosive materials (no steel). Benched shall be surface mounted.
- Two dressing stalls per side.
- Stainless steel towel hooks.
- Ceiling mounted exhaust fan.
- One heater per side (gas preferred).
- Natural illumination when feasible. Skylights shall have security grates beneath.
- Floor drains, a minimum of one floor drain per 100 square feet of floor area. Showers shall have one floor drain each. Floor drains shall be tied into the sewer system with a minimum four-inch size pipe.
- Floors shall slope at 1.5 percent maximum in any direction toward the floor drains.
- One electric hand dryer for each pair of sinks, with the heat element removed.
- One diaper changing station per side.
- One janitorial closet per side.
- Flooring in restrooms and locker rooms shall be per Facilities Maintenance Guideline Specifications.

2.25.2.8 Family Changing Room: Provide a minimum of one family changing room with a toilet, sink, shower, and diaper changing station. Provide a sensor activated faucet and soap dispenser with the sink. Plumb the sink and shower for tempered water. Provide a soap dispenser for the shower. Provide a floor drain tied into the sewer system with a minimum four-inch size pipe.

2.25.2.9 Pool Supplies Storage Room: Provide a storage room with shelving for pool equipment and instructional items. The storage room shall be approximately 150 square feet in size.

2.25.2.10 Outdoor Showers: Provide a minimum of four outdoor showers, plumbed for tempered water. Provide a minimum of one floor drain per 100 square feet of shower area, tied into the sewer system with a minimum four-inch size pipe. Outdoor showers shall be under an overhang and designed such that rain water cannot enter the shower drainage system (sewer system).

2.25.2.11 Mechanical Room: Provide a separate mechanical room for pool pump, filter, and chemical mixing equipment.

- The pool pump, filter, and associated equipment shall occupy the main area of the mechanical room. The mechanical room shall be sized adequately to house the required equipment and allow adequate space for maintenance and replacement.

- Provide a separate room for the chlorine storage tank, with a locking chain link gate that opens to the main area of the mechanical room. Size the room for a 500-gallon tank.

- Provide a separate room for the CO_2 storage tank, with a locking chain link gate that opens to the main area of the mechanical room.

- Provide double doors with a minimum width of six feet for the main entrance to the mechanical room. Main doors shall open to the parking lot or other adequate access route.

- Provide a utility sink in the mechanical room.

- Provide a minimum of one floor drain per 100 square feet, connected to the sewer system with a minimum four-inch size pipe.

- Provide a hoist mount in the ceiling above the pool equipment. The mount shall be capable of supporting the weight of the equipment specified plus 200 pounds.

2.25.2.12 Electrical Room: Provide a separate electrical room to house all electrical panels and meters. The electrical room shall be accessible from the exterior of the building.

2.25.3 Swimming Pools and Decks

2.25.3.1 Deep Water: The deep area of the pool shall be designed to accommodate competitive swimming, water polo, and synchronized swimming (25 yards by either 25 or 50 meters) with a minimum of six lanes at a minimum depth of six feet-six inches (6'-6"). Deep water is also required for high level instruction (lifeguard training and diving instruction). Orientation for lap lanes shall be on a north/south axis. However, rope anchors shall be installed so lane directions can be changed to allow for multiple programs in the pool at one time.

2.25.3.2 Shallow Water: The shallow area of the pool shall be designed to best serve the instructional needs of participants. The maximum depth at the shallow end of the pool shall be three feet-six inches (3'-6"). Where space allows, shallow areas

shall be between 18 inches and four feet-six inches (4'-6"). Where a sloped entry is used to meet accessibility requirements, a majority of the shallow area shall be between the depths of 18 inches and 4 feet six inches (4'-6"). Rope anchors and a black tile warning stripe shall be placed at the grade break at the four foot-six-inch (4'-6") depth.

2.25.3.3 All new pools shall be designed with a perimeter gutter system with the water level a maximum of twelve inches below the top of coping or with an overflow edge.

2.25.3.4 Entrance to swimming pools shall be ADA compliant, and shall be accomplished via pool steps and either a swimming pool lift or a sloped entry.

2.25.3.5 All swimming pools shall be surfaced with white plaster.

2.25.3.6 All tiles for lane lines, targets stair tread contrasting stripes and warning stripes shall be black, unglazed ceramic.

2.25.3.7 All water line tiles shall be glazed ceramic with the color selected by Parks and Recreation Department Staff.

2.25.3.8 Pool lighting shall be accomplished through the use of light emitting diode (LED) pool lights in dry niche sockets. Pools shall be illuminated to 15 candelas per square meter with a uniformity of 4:1 or less from maximum to minimum lighting.

2.25.3.9 Pool decks shall be Portland cement concrete with a design strength sufficient to support heavy maintenance vehicles. Due to corrosion concerns, avoid the use of traditional steel reinforcement. Use light colors for concrete decks to avoid heat build-up.

2.25.3.10 The pool deck shall be illuminated to the standards identified in Title 24 of the California Building Code. See Section 2.15, Site and Sports Lighting. Avoid glare on the pool surface that may obscure views into the pool.

2.25.3.11 The entire pool area shall be secured with a ten-foot-high vinyl coated chain link fence per San Diego Standard Drawings. Provide top, middle and bottom rails. The chain link fabric shall have a one-inch mesh. Provide wind screens to a height of six feet.

2.25.3.12 Provide a twelve-foot-wide double swing gate at the deck area for emergency and repair vehicles. The gate shall be black vinyl coated chain ling with one-inch mesh fabric. Provide wind screens on the gate to a height of six feet.

2.25.3.13 Provide a ten-foot-high by ten foot by twenty-foot chain link storage area with a roof for pool equipment storage. Provide a double gate at the end of the storage area. Fencing shall be vinyl coated chain link with a one-inch mesh. Provide wind screens to the full height of the storage area.

2.25.3.14 Provide one high-low drinking fountain on the pool deck.

2.25.4 Spectator Seating Area

2.25.4.1 Provide a spectator seating area that is physically separated from the pool deck with a four-foot-high vinyl coated chain link fence. Provide a four-foot-wide self-closing chain link gate between the spectator seating area and the pool deck.

2.25.4.2 The spectator seating area shall be secured with a ten-foot-high vinyl coated chain link fence. Provide a four-foot-wide self-closing chain link gate to the exterior of the pool complex. Provide wind screens on the fence to a height of six feet.

2.25.4.3 Provide a shade structure over the spectator seating area.

2.25.4.4 Provide two 15-foot long, three-row, aluminum tip-and-roll bleachers for the spectator seating area. Incorporate accessible seating into the bleachers.

2.26 GRAFFITI PROTECTION

All building walls, site walls, and concrete amenities such as tables, benches, drinking fountains, etc. shall be treated with a non-sacrificial anti-graffiti material. See C for anti-graffiti materials and application.

3 GRAPHIC AND DRAFTING STANDARDS

To ensure consistency and clarity, the following graphic and drafting standards apply to all park projects. These standards are to be adhered to in the preparation of General Development Plans, Construction Plans and As-Built Plans. If the project requires a Discretionary Permit, the plans will need to meet the additional criteria of the Development Services Department.

3.1 GENERAL DEVELOPMENT PLANS (GDPs)

3.1.1 Description: A General Development Plan (GDP) is a conceptual master plan for a park's design. The GDP is used in presentations to Parks and Recreation Department advisory bodies, as a basis for public project assessment and environmental documentation, and as the exhibit on which Construction Plans will be based. The graphics and drafting requirements for General Development Plans shall conform to Park and Recreation Board Policy No. 1011. Refer to Appendix A, and the following criteria.

3.1.2 General Requirements for all GDPs

3.1.2.1 All GDPs shall be on the approved Parks and Recreation GDP border with all data blocks filled in. An electronic version of the GDP border is available on the Parks and Recreation Department web site.

3.1.2.2 The project title shall be on all GDP plans and boards. The project title shall be "General Development Plan for (park name) Community Park or Neighborhood Park".

3.1.2.3 Plans shall have a north arrow pointing to the top or left side of the page, and graphic and written scale.

3.1.2.4 The GDP shall clearly indicate all on-site facilities including buildings, parking areas, play areas, walkways, site furniture, lighting, landscape materials, drainage, and other improvements. A legend or call-out shall be provided for all symbols.

3.1.2.5 Property or limit of work lines shall be shown using bold lines to delineate the area of work.

3.1.2.6 Conceptual planting, grading and storm water facilities shall be shown on the plans. Grading, planting and storm water information may be shown on the plan or provided as separate exhibits.

3.1.2.7 Play equipment safety zones and any critical dimensions are to be included.

3.1.2.8 The GDP shall be colored for advisory body presentations.

3.1.3 Grading: Conceptual grading shall be shown on the GDP or as a separate plan for the entire project site. Clearly indicate existing and proposed contours. Structural BMP's (green infrastructure) are to be included in the final design and conceptual designs shall be included on the plans.

3.1.4 Planting Design and Palette: All existing and proposed planting shall be shown on the GDP. Trees shall be represented graphically with a mature canopy. The plant palette shall provide categories identifying the form and function of the plant material, such as Street Trees, Canopy Trees, Accent Trees, Screening Shrubs, Accent Shrubs, Groundcovers, Slope Planting, etc. Recommended plant species for each category shall be provided.

3.1.5 Building Plans and Elevations (if applicable): When buildings are part of the park design, provide a plan showing the conceptual floor plan, roof plan and all elevations to clearly indicate the design of the structure. These plans shall be colored for advisory body presentations. A materials board shall be provided, showing samples of proposed exterior materials, colors, and textures.

3.1.6 Park Sign Plan and Elevation(s): Provide a plan of the park monument sign, including elevations clearly indicating the sign elements and materials. Indicate the proposed sign location on the GDP.

3.1.7 Special Site Details and Site Furniture: Provide details, plans, and elevations of any custom site elements, such as seat walls, overhead trellis structures, fencing, paving, etc. The materials and finishes shall be indicated in the details along with any critical dimensions. Provide catalog cuts of all proposed manufactured site furniture, play equipment, light fixtures, etc.

3.1.8 Project Cost Estimates: A project cost estimate shall be prepared during the design of the park and finalized at the end of the General Development Plan phase. All costs shall be included in the estimate, including a cost for a 90-day or 120-day plant establishment period and a 10 percent contingency.

3.2 CONSTRUCTION PLANS

3.2.1 Description: Construction Plans are the technical plans used for obtaining bids, the actual construction, and the As-Built drawings. These plans shall be prepared in compliance with the approved General Development Plan. All construction plans for parks shall be submitted to the City's Engineering Maps and Records section for final recording. Construction Plans shall meet the graphic and drafting standards listed below.

3.2.2 General Requirements for all Construction Plans

3.2.2.1 Sheet Format: All projects shall be on City standard 'D' sheets (24-inch X 36 inch). Larger sheet sizes are acceptable with Project Manager approval.

3.2.2.2 Title Block: Within the title block provide the Project Name and Phase (if applicable), Work Breakdown Structure (WBS) Number, Lambert Coordinates and Drawing D-sheet Number. Above the title block shall be 'Private Contract' or 'Public Contract', depending on the type of project. City Contracts shall also include the Capital Improvement Program (CIP) Number (if different from the WBS Number) and Special Specification Number above the title block.

3.2.2.3 Lettering: Shall be capitalized and no smaller than 1/8-inch-high when hand lettered, and no smaller than 1/10-inch-high when mechanically or computer

lettered. The space between lines of lettering shall be not less than one-half the height of the letters.

3.2.2.4 **Media:** The final submittal for all drawings shall be on single or double matte mylar with a minimum thickness of 3 mils. Hand drawn plans shall be done in ink or plastic lead manufactured for use on plastic drawing film.

3.2.2.5 **Key Map:** A key map shall be provided on each sheet if the project contains multiple plans.

3.2.2.6 **Matchlines:** Matchlines for projects requiring multiple sheets shall be labeled to provide adequate reference for identification and cross-indexing to other plans.

3.2.2.7 **North Orientation:** North arrow with scale shall be shown on each sheet. North orientation of plan shall be to the top or to the left side of the plan.

3.2.2.8 **Scale of Plans:** All plans shall be done at a scale no smaller than 1 inch = 30 feet. Prior Parks and Recreation Department approval is necessary if projects require a smaller scale to fit onto sheet size. If additional detail is required, a larger scale is to be utilized to provide sufficient clarity. Provide a written and graphic scale on all plans.

3.2.2.9 **Limit of Work:** A limit of work line shall be provided showing the project area of work.

3.2.2.10 **Streets:** Label streets that are adjacent to the project or within the project's immediate area.

3.2.2.11 **Professional Registration Stamp:** The professional registration stamp of the architect or engineer responsible for the plan shall be provided on all plans, signed and dated.

3.2.2.12 **Provide the following note on all plans:** "SHEET SIZE AND SCALE: IF SHEET SIZE IS LESS THAN 24" X 36", IT IS A REDUCED PRINT - SCALE ACCORDINGLY."

3.2.3 **Title Sheet:** Title sheet shall include but not be limited to the following:

3.2.3.1 **Name of Project:** The project name and the project phase, if applicable, shall be placed at the top of the Title Sheet in 48-point font or larger.

3.2.3.2 **Vicinity Map:** A vicinity map showing nearest arterial intersection, street names, north arrow and project location.

3.2.3.3 **Location Map:** A location map showing the project area and applicable street names, north arrow, matchlines, project limits, tract boundaries and scale.

3.2.3.4 **Project Address:** Provide a brief legal description and street address.

3.2.3.5 **Project Directory:** A project directory that lists the prime consultant and all the sub-consultant's firms, addresses, phone numbers, fax numbers and e-mail if applicable.

3.2.3.6 **Sheet Index:** Provide a sheet index listing plans by Sheet Number, D-Sheet Number and Sheet Title.

3.2.3.7 **Right Hand Margin:** The project name shall be provided on the right hand margin of the title sheet.

3.2.3.8 **Survey Data:** The survey data shall be provided by listing the following applicable aerial, field survey or benchmark information on the Title Sheet:

Aerial Survey	Field Survey	Benchmark
Party Chief:	Party Chief:	Description:
Contractor:	Date:	Location:
Date:	Index:	Elevation:
Coordinate Index:	Work Order:	
Work Order No.:		

3.2.3.9 **Bid Alternates:** 'Deductive' or 'Additive' alternates shall be listed, if applicable, on the title sheet in order of preference. Describe each alternate and reference the applicable plans for further description.

3.2.3.10 **Existing Drawings Affecting the Project:** Reference on the Title Sheet all existing drawings affecting the project, such as prior grading or street improvement plans, with a work order number or building permit number.

3.2.3.11 **Description of Work:** Provide the following note on the Title Sheet:

Description of the Scope of Work:
(Provide a brief description of all the work to be done)

3.2.3.12 **Standard Drawings and Specifications:** Provide the following note on the Title Sheet:

Applicable Standard Drawings and Specifications:

Greenbook - Standard Specifications for Public Works Construction including the City of San Diego "Whitebook" supplement to the Greenbook (current edition).

City of San Diego Standard Drawings (current edition).

Disabled Access Regulations, Title 24, (current edition) and California State Accessibility Standards Interpretive Manual (current edition) prepared by the Office of the State Architect and the Department of Rehabilitation.

Americans with Disabilities Act Regulation: ADAAG (The Americans with Disabilities Act Accessibility Guidelines) issued by the Architectural and Transportation Barriers Compliance Board (current edition).

Manual of Traffic Controls for Construction and Maintenance Work Zones, State of California Department of Transportation (current edition).

U.S. Consumer Products Safety Commission Handbook for Playground Safety (current edition).

Note: The most current editions of the preceding documents shall be used. Where one or more sets of specifications or drawings are applicable, the more restrictive shall take precedence.

3.2.3.13 Underground Utilities: Provide the following note on the Title Sheet:

CAUTION:
Before excavating, verify the location of underground utilities. At least two (2) working days prior to excavation, the Contractor shall request mark-out of underground utilities by calling the below listed regional notification center for an inquiry identification number:

Underground Service Alert (Gas, Electric, Telephone, Water, Sewer, Lighting, and TV)	(800) 422-4133
Irrigation Systems	(619) 533-5783
Irrigation Control Wire:	(619) 533-5783
Facilities Maintenance Division	(619) 525-8500

3.2.3.14 Declaration of Responsible Charge: Provide the following note on the Title Sheet:

Declaration of Responsible Charge:

I hereby declare that I am the (Engineer, Landscape Architect, Architect) of Work for this project, that I have exercised responsible charge over the design of the project as defined in Section 6703 of the Business and Professions Code, and that the design is consistent with current standards.

I understand that the check of project drawings and specifications by the City of San Diego is confined to a review only and does not relieve me, as (Engineer, Landscape Architect, Architect) of Work, of my responsibilities for project design.

_____
Name of (Engineer, Landscape Architect, Architect), License Number, Date
Firm Name (Engineer, Landscape Architect, Architect)
Address
Phone Number
Fax Number
Email Address

3.2.3.15 Inspection Stages: Provide the following note on the Title Sheet:

<u>Park Construction Inspection Stages and Inspection Team:</u>

<u>Park Inspection Team</u>

A. Site Superintendent (Contractor/Developer's Representative)
B. Contractor(s)
C. Resident Engineer from Public Works Department, Construction Management and Field Services Division
D. Project Manager
E. Consultant
F. Parks and Recreation District Manager
G. Parks and Recreation Asset Manager

<u>Park Construction Inspection Stages: (Minimum depending on project)</u>

1. Pre-construction meeting.
2. Demolition Mark-out (if applicable)
3. Rough grading and drainage.
4. Irrigation mainline pressure test.
5. Irrigation lateral line pressure tests.
6. Wiring prior to backfilling trenches.
7. Hardscape at time of finished staking and layout.
8. Finish grading and soil preparation.
9. Irrigation coverage test.
10. Plant material (when delivered) and placement approval.
11. Play Ground Inspection, if applicable.
12. Project construction 90 percent complete (develop punch list and submit red-line As-Builts).
13. 90-Day Plant Maintenance Period (this inspection is to be held when the punch list items are complete. If turf area is planted from seed or stolons the plant maintenance period shall be 120-days).
14. Final walk-through, acceptance by the City. Contractor to submit final approved As-Built drawings to the City.

3.2.3.16 Water Fees: Provide the following note on the Title Sheet:

<u>WATER FEES:</u>
The City of San Diego Project Manager and the Consultant shall coordinate the following: Water and Sewer Capacity Fees and the Wet Tap Fees shall be pre-paid by the City for City contracts; the Contractor shall pay all other construction and maintenance water meter and sewer fees and shall coordinate with the Water Utilities Department for installation of services. Allow three (3) months' notice to the Water Utilities Department. For Developer-Built projects, all fees shall be paid by the Developer.

3.2.4 Demolition Plans: Demolition plans shall be included for all park sites with existing improvements that will require demolition. The plans shall clearly show all improvements to remain and all improvements to be removed. Improvements both above ground and below ground shall be shown. Clearly label all utilities and easements. Demolition notes shall be included on the plans.

3.2.5 Grading and Drainage Plans: Grading and drainage plans shall conform to the City's Manual for the Preparation of Land Development and Public Improvements and the Municipal Code Grading Ordinance. Grading plans shall be prepared by a professional, as licensed and allowed by the California Business and Professions Code. The following shall be included on the plans.

3.2.6 Existing and Proposed Finished Grades: Existing and proposed finish grades shall be graphically shown on the plans with minimum two-foot contours and spot elevations for the entire site and within 50 feet of the site boundaries. The plan must clearly show how the site will drain and to where. All areas of the site must have positive drainage.

3.2.6.1 Spot Elevations (existing and proposed): Spot elevations shall be shown at all high points, low points, changes in gradients, changes in elevations (stairs, curbs, etc.), hardscape, corners of structures, finish floor elevations, drain locations and inverts, top and bottom of walls, and any other locations necessary to indicate the proposed grading design.

3.2.6.2 Slope Gradients: Slope gradients shall be labeled as a percentage or as a ratio.

3.2.6.3 Property Lines and Off-Site Grading: Clearly show property lines and indicate all off-site grading. Provide a letter of permission from the adjacent land owners for proposed off site grading.

3.2.6.4 Limit of Grading: Areas to remain undisturbed shall be indicated on the plans.

3.2.6.5 Grading and Drainage Details: Grading and drainage details shall be provided for all details that do not conform to the City of San Diego Standard Drawings.

3.2.6.6 Grading Notes: Grading notes shall be provided on the plans.

3.2.7 Stormwater Management Plans: Provide storm water management plans suitable to the project per Storm Water Department regulations and the San Diego Municipal Code.

3.2.8 Layout and Construction Plans: Layout and construction plans shall include but not be limited to the following:

3.2.8.1 Existing and Proposed Improvements: Walkways, paving, mow curbs, fences, walls, site furniture, multi-purpose courts and fields, play areas, buildings, parking lots, signs, trails, etc., shall be graphically located on the plans.

3.2.8.2 Horizontal Control: All proposed improvements shall be located on a horizontal control plan.

3.2.8.3 Construction Legend: Shall include all symbols used on the plan.

3.2.8.4 Site Amenities and Materials Legend: Legend shall include a symbol, manufacturer/model no., description of material, color, detail number, and other information, as required.

3.2.8.5 **Construction Details:** Construction details shall be provided for all details that do not conform to the City of San Diego Standard Drawings.

3.2.8.6 **Construction Notes:** Construction notes shall be provided on the plans.

3.2.8.7 **Construction Specifications:** Construction specifications shall be provided on the plans or provided in a specification book with the City Project Manager approval.

3.2.8.8 **Playground Construction Notes:** Provide the following notes on the Playground and Equipment Plans:

CONTRACTOR EXPERIENCE:
The contractor shall have National Playground Safety Institute (NPSI) certification for installers and in addition the installers shall be certified by the equipment manufacturer to install their equipment and safety surfacing. The NPSI certified installers shall be involved in the construction of the playground at all times during construction and including preparation of the subgrade.

PLAYGROUND AUDIT / NPSI CERTIFICATION:
The Contractor shall be responsible for providing an independent third-party audit of the playground area, safety surfacing and all play equipment. The audit shall be conducted by a NRPA/NPSI Certified Playground Safety Inspector in accordance with NPSI standards. The audit shall determine compliance of the playground area, safety surfacing and all play equipment with the most current versions of accessibility and safety standards, including the following: Americans with Disabilities Act (ADA); Consumer Product Safety Commission (CPSC) Handbook for Public Playground Safety; the American Society for Testing and Materials (ASTM) Standard Consumer Safety Performance Specification for Playground Equipment for Public Use (ASTM F1487) and Standard Specification for Impact Attenuation of Surface Systems Under and Around Playground Equipment (ASTM F1292) and Standard Specification for Determination of Accessibility of Surface Systems Under and Around Playground Equipment (ASTM F1951). Poured-in-place playground safety surfacing shall be tested on site after installation in accordance with ASTM F1292; Manufacturer's certification is not acceptable.

The Contractor shall be responsible for correcting any items found not to be in compliance with the above standards as a result of the audit, at no charge to the City. The Contractor shall provide to the Resident Engineer and Project Manager a signed letter stating that the playground area, safety surfacing and play equipment comply with all current applicable accessibility and safety standards. The letter shall include an itemized list corresponding to each audit item, describing all corrections and the date each correction was competed. If applicable, the letter may state that any equipment in question is certified by International Playground Equipment Manufacturers Association (IPEMA). (Provide manufacturer's proof of IPEMA certification.)

3.2.9 Irrigation Plans: Irrigation plans shall include but not be limited to the following:

3.2.9.1 Point of Connection and Meter:

- Service: Domestic or recycled.
- Water meter size and service lateral size.
- Water meter address.
- Installation requirements and responsibilities of the water purveyor and the Contractor.
- Available static water pressure at point of connection (POC).
- Design pressure.
- Peak flow through water meter (in GPM).

3.2.9.2 Irrigation Booster Pump (if required).

3.2.9.3 Backflow Prevention Device (sized same as meter).

3.2.9.4 Wye Strainer.

3.2.9.5 Pressure Regulator Valve (if required).

3.2.9.6 Master Valve and Flow Sensor.

3.2.9.7 Recycled water test station (recycled water systems only).

3.2.9.8 Automatic Irrigation Controller: Location, number of stations, identifying letter and electrical service (or reference electrical plans for service).

3.2.9.9 Rain Shut-Off Device.

3.2.9.10 Isolation Valves (sized on plans).

3.2.9.11 Remote Control Valves: Size, irrigation controller letter, valve station number and GPM.

3.2.9.12 Quick Couplers (with globe valves).

3.2.9.13 Irrigation Mainline and Size.

3.2.9.14 In-line Check Valves.

3.2.9.15 Irrigation Heads.

3.2.9.16 Irrigation Lateral Line and Size.

3.2.9.17 Irrigation Sleeves.

3.2.9.18 Control Wire Routing and Pull Boxes.

3.2.9.19 Drinking Fountains: Locations and water source.

3.2.9.20 Irrigation Legend: Include all symbols, manufacturer model number/size, description of equipment, radius, PSI, GPM, detail number or standard drawing number.

3.2.9.21 Irrigation Details: Provided all details that do not conform to the City of San Diego Standard Drawings.

3.2.9.22 Pressure Loss Calculations: Provide pressure loss calculations (incorporate residual loss factor) for the system with the highest pressure requirement for each controller. Pressure loss calculations shall take into account the need to run multiple valves at the same time to meet the irrigation water window identified in this Guide.

3.2.9.23 Irrigation Notes.

3.2.9.24 Irrigation Specifications: Irrigation specifications shall be provided in a specification book.

3.2.10 Planting Plans: Planting plans shall include but not be limited to the following:

3.2.10.1 **Plant Symbols (trees, shrubs, vines, groundcovers, etc.):** Proposed plant materials shall be graphically shown on the plans with a symbol that represents the mature size of the proposed species. Show all existing plant material that will remain on the site as a dash symbol.

3.2.10.2 **Planting Legend:** The planting legend shall include the symbol, quantity, size, botanical name, common name, detail number, and any special remarks such as on-center spacing, tree height and width, variety or color.

3.2.10.3 **Seed Mix Information:** Shall include the botanical name (s), % pure live seed, total pounds per acre, mulch, binder, fertilization, and inoculation requirements. Identify if the seed mix is irrigated or non-irrigated.

3.2.10.4 **Planting Details:** Planting details shall be provided for all installations that do not conform to the City of San Diego Standard Drawings.

3.2.10.5 **Planting Notes:** Planting notes shall be provided on the plans.

3.2.10.6 **Fertilization Notes:** Provide fertilization notes on the plans for both pre-planting application and post-planting (maintenance period) applications.

3.2.10.7 **Planting Specifications:** Planting specifications shall be provided on the plans or in a specification book with Project Manager approval.

3.2.11 Lighting Plans: Lighting plans shall include but not be limited to the following:

3.2.11.1 **Proposed Lighting:** All security and sports lighting shall be graphically located on the plans including all light poles, fixtures, pull boxes, transformers, and other components. Sports lighting poles shall be shown with dimensions from identified landmarks for each pole location.

3.2.11.2 **Point of Connection:** The service point shall be shown on the plans. If the point of connection is not within the project site, the service point shall be identified in a vicinity map detail. The San Diego Gas & Electric (SDG&E) planner and their phone number shall be identified on the plan. Any SDG&E fees shall be enumerated by an appropriate bid item.

3.2.11.3 **Light Fixture Legend:** The light fixture legend shall include symbols for poles, fixture types, conduit size, panels, and utility service points.

3.2.11.4 **Lighting Fixtures Schedule:** The light fixture schedule shall identify manufacturer, model number, type of fixture, voltage, and wattage.

3.2.11.5 **Panel Schedule:** The electrical panel schedule shall designate circuits with the number of devices being served, voltage, number of phases, short circuit rating, load continues amperage, etc.

3.2.11.6 **Lighting Details:** Lighting details shall be provided for all details that do not conform to the City of San Diego Standard Drawings, including but not limited to, conduit, pull box installation, foundation installation, and configuration of all panels.

3.2.11.7 **Lighting Notes:** Lighting notes shall be included on the plans.

3.2.11.8 **Lighting Specifications:** Lighting specifications shall be provided on the plans or provided in a specification book with the Project Manager approval.

3.2.11.9 **Sports Lighting Illumination Levels:** Identity on the plans the foot-candle levels for each type of sports activity to be illuminated. Designate average maintained illumination levels and uniformity ratios (maximum to minimum).

3.2.11.10 **Sports Lighting Fixture Aiming:** Identify on the plans the aiming point on the playing surface for each fixture.

3.2.11.11 **Sports Lighting Testing:** Provide notes on the plans indicating the contractor is responsible for testing the lighting on each sports field, and for furnishing a written report to the Project Manager indicating the testing results of the illumination levels in foot-candles and uniformity ratios for each field.

3.3 AS-BUILT PLANS

As-Built Plans are the final record of what was constructed. The Design Consultant, as part of the Consultant's contract, shall be responsible for correcting the original mylar construction plans to show the as-built conditions. The Design Consultant shall obtain the original mylars and the current requirements for "Drawings: Changes and Revisions" from DSD City Maps and Records Section. All as-built changes noted on the red line set shall be incorporated on the mylars with water-proof ink. The drafting shall be of equal quality to the original mylars. Erase all incorrect information and add any Field Engineer's comments. Provide the word 'As-Built' in large lettering in the margin below the Title Block on all sheets changed. The original Architect, Engineer, or Landscape Architect must sign the as-built sheets.

4 PROJECT PROCESS, SUBMITTALS, AND APPROVALS

The project, submittals and approval processes will vary relative to the type of project and the phase of work being addressed. It is recommended that the Consultant meet with the Project Manager to confirm the appropriate project process, submittals, and approvals, for public or privately built parks prior to starting the project. The following outline is a typical process for park projects.

4.1 GENERAL DEVELOPMENT PLANS (GDPs)

4.1.1 General: The process for community notification and input for city-wide park development projects is outlined in Council Policy 600-33. The Project Manager, Consultant, and Parks and Recreation Department Staff shall review this policy at the start of the project. The Project Manager shall determine what, if any, additional reviews and approvals may be required based on the scope, complexity and location of the project.

4.1.2 Project Program Meeting: The Consultant will meet with the Project Manager and Parks and Recreation Department Staff to review and discuss the proposed project program and budget. The Consultant will prepare a memo to the Project Manager summarizing the proposed project program, a project schedule, and any special issues or site constraints which will affect the outcome of the design.

Submittal: Memo of Proposed Project Program and Schedule.

4.1.3 Workshop #1 - Public Input of a Preferred Project Program: The Project Manager will set up and advertise the first workshop with the officially recognized Recreation Council or Area Committee (Committee) for public input per Council Policy 600-33. The Project Manager will prepare project information that outlines the roles of the Project Manager, Consultant, Parks and Recreation Department Staff, and the community members; the anticipated scope of work; the project budget and funding sources; and projected time schedule. The Project Manager and Consultant will present this information and the GDP process to the Recreation Advisory Group. The Recreation Advisory Group will provide input regarding the development of a preferred project program, as well as a community priority ranking of the proposed program elements (a written questionnaire can be used to get community input at the meeting and to document what was said). This information will give Parks and Recreation Department Staff, the Project Manager, and Consultant clear direction regarding community desires and will be used to develop conceptual alternatives that maintain community priorities and the project budget. The Consultant will prepare a summary report of the public input.

Submittal: Summary Report of Workshop #1, including preferred project program and priority ranking of program.

4.1.4 Conceptual Alternatives Meeting: The Consultant will prepare conceptual alternatives for review and discussion with the Project Manager and Parks and Recreation Department Staff (the number of alternatives that are appropriate for the individual project will be determined by the Project Manager). These conceptual alternatives should show how the project program will be accomplished within the specific site, taking into consideration the site constraints and budget requirements.

A preliminary statement of probable costs shall be developed and submitted to the Project Manager.

Submittal: Conceptual Alternatives and Preliminary Statement of Probable Costs.

4.1.5 Workshop #2 - Community Input of Conceptual Alternatives: At the second community workshop, the Project Manager will present a summary of the preferred project program and the Consultant will present the conceptual alternatives to the Recreation Advisory Group for community input. The graphics for the conceptual alternatives shall comply with Park and Recreation Board Policy No. 1011 (see Appendix A). At this second meeting, the Recreation Advisory Group will have an opportunity to review and comment on the conceptual alternatives. Community members will be allowed to: a) recommend individual elements from the conceptual alternative to be synthesized into a preferred alternative plan, or b) recommend the presented conceptual plan that best meets the outlined project program and priorities identified in the first workshop.

Submittal: Summary Report of Workshop #2, including recommend conceptual alternative and/or recommended individual elements.

4.1.6 Preferred GDP Meeting with City Staff: The Consultant will incorporate the proposed revisions and prepare a preferred GDP and statement of probable cost for review and recommendation by the Project Manager and Parks and Recreation Department Staff.

Submittal: Preferred General Development Plan based on Workshop #2 and Statement of Probable Cost.

4.1.7 Preliminary Meeting with Development Services Department: The Project Manager, the Consultant, and if necessary Parks and Recreation Department Staff shall meet with Development Services Department (DSD) staff to review the scope of the proposed project in accordance with DSD Bulletin 510, Public Project Assessment. The Project Manager and Consultant shall prepare the Public Project Assessment package for submittal to DSD for permit assessment and environmental review.

Submittal: Public Project Assessment forms and submittal package.

4.1.8 Additional Advisory Committees: The Project Manager will determine which additional advisory committees will be required based on the project type. For each of these additional meetings the Project Manager will prepare the staff reports and other materials required and distribute them through the designated representative from assigned Department Staff. At each of these additional meetings, the Project Manager will present the project program and previous recommendations, and the Consultant will present the preferred General Development Plan. Additional Committees could include:

- Accessibility Advisory Board
- Historical Resources Board's Design Assistance Subcommittee (HRB DAS)
- Historical Resources Board (HRB)
  Note: If Historical Resources Staff determines a project must be reviewed by the Historical Resources Board, such review must occur after recommendation by the Park and Recreation Board. The environmental document, if any, must be the final version for Historical Resources Board review.

4.1.9 Park and Recreation Board or Task Force Approval: The Project Manager will prepare the staff report to the Park and Recreation Board or Task Force and distribute the specified number of copies through the designated Staff Representative. The City Project Manager will present the project and draft/final environmental document to the Board or Task Force for approval. The Consultant will be available to provide a presentation of the preferred GDP, if requested by the Board or Task Force.

Note: The environmental document, if any, must be the Draft or Final version for Park and Recreation Board review.

Submittal: Final General Development Plan(s).
Draft/Final Environmental Document.

4.1.10 Submittal of Final General Development Plan to Project Manager: Consultant shall submit the final General Development Plan Package and Statement of Probable Cost to the Project Manager.

Submittal: General Development Plan line drawing (not colored) in PDF format, to scale.
General Development Plan, colored, in PDF format, to scale.
General Development Plan line drawing in DXF format.

4.2 CONSTRUCTION PLANS

4.2.1 Preparation of Plans, Specifications, and Cost Estimate: The Consultant shall obtain the correct title block from the Project Manager. The construction plans shall be prepared based on the approved GDP. Any modifications to the approved GDP design shall be approved by Parks and Recreation Department Staff.

Submittal: Any modifications to the GDP design shall be submitted in writing.

4.2.2 60% Plan Check Submittal to Project Manager: The Consultant shall submit the construction plans and preliminary cost estimate to the Project Manager at 60% completion for an in-house City plan check. The Project Manager shall review the 60% submittal and forward redlined plans to Parks and Recreation Department Staff for comment. Where buildings are in the scope of work, plans shall also be distributed to the Facilities Maintenance Division of the Real Estate Assets Department. Plan check comments will be sent to the Consultant within 30 days of receiving the plans. Consultant shall incorporate comments into the plans.

Submittal: 60% Construction Plans and preliminary cost estimate.

4.2.3 90% Plan Check Submittal for Permits and Revisions: The Consultant shall submit the construction plans, specifications and cost estimate to the Project Manager at 90% completion. These plans shall be considered substantially complete, with only plan check comments resultant from the 90% review to be addressed. The Consultant shall also submit the 90% construction plans to the Development Services Department for any required building or engineering permits. Specification formatting shall follow the Public Works Department's Project Implementation Division requirements. The Project Manager shall review plans and specifications for conformance to the GDP and this Consultant's Guide, and submit plans and specifications to Contract Services for City-wide Plan Check distribution. The Parks and Recreation Department shall be included in the City-wide Plan Check Distribution. The Consultant shall implement all plan check corrections.

Submittal: 90% Construction Plans and Specifications and Final Cost Estimate.

4.2.4 100% Submittal: The Consultant shall submit the 100% plans, specifications and cost estimate to the Project Manager for final approval. The Project Manager shall verify all revisions have been made and review the final plans with the Parks and Recreation Department. If all revisions have been made to the satisfaction of the Project Manager and Parks and Recreation Department Staff, the Project Manager shall submit the 100% plans and specifications for public bid.

Submittal: 100% Construction Plans and Specifications.

4.2.5 Plans Approved and Submitted to City Records: Consultant shall coordinate with the Project Manager, submittal of original mylars to the DSD City Maps and Records Section.

Submittal: Original Mylars.

4.3 AS-BUILT PLANS

4.3.1 As-Built Plan Requirement: Each Consultant shall be responsible for coordinating the completion of the as-built plans. The Consultant shall specify in the plans that the Contractor shall maintain a blueprint set of plans, with as-built information noted in red ink, on the site at all times during construction, and shall update information weekly.

4.3.2 Redline Set of As-Builts Submittal to Project Manager: Upon the completion of construction and prior to the start of the Plant Establishment Period, the Contractor shall provide a redline set of as-built drawings to the Resident Engineer for review and approval. The redline set shall clearly reflect the actual locations of all above-ground and below-ground improvements. Buildings and equipment such as valves and backflow preventers shall be referenced and dimensioned from two fixed points on the site to triangulate their location to the nearest six inches. The redline set shall also reflect any modification of equipment/products used that differ from the legends on the plans. Addresses for utility meters (water, gas, electrical) shall be correctly indicated on the redline set.

4.3.3 Transfer of As-Built Information onto Digital Originals: After the redline set of as-built drawings have been approved by the Project Manager, the Consultant shall revise the original mylar drawings in accordance with the redline set. The Consultant shall be responsible for the accuracy of the completed as-built plans.

4.3.4 Certification of the Final As-Builts: The original Architect, Engineer, or Landscape Architect of record shall make the as-built corrections and sign the sheets. The mylars with the as-built information shall be re-submitted to DSD City Maps and Records for recording. As-built drawings shall be completed prior to the end of the maintenance period so that two sets of drawings can be provided to the Parks andRecreation Department at the time the project is accepted by the City of San Diego.

Submittal: Signed original mylars with approved "as-built" information.
PDF of Final As-Built Drawings (to Parks and Recreation)

APPENDICES

Consultant's Guide to Park Design & Development

Appendix A	Park and Recreation Board Policies: No. 1001: Naming of Parks and Recreation Facilities No. 1011: Graphic Presentations for the Park and Recreation Board and Committees No. 1302: Park Signs and Recognition Media in Community, Neighborhood, and Open Space Parks
Appendix B	Sample Irrigation Legend
Appendix C	Approved Manufacturers and Products List
Appendix D	Standard Park Details: A: Multi-Purpose Courts B: Tennis Courts C: Multi-Purpose Fields D: Tot Lots
Appendix E	Trail Policies and Standards
Appendix F	Policy on Avoiding Use of Non-Native Invasive Plants in Parks and Recreation Department Projects
Appendix G	General Development Plan Border
Appendix H	Sample General Development Plan

NO. 1001
Revised 11/15/01

PARK AND RECREATION BOARD POLICY

SUBJECT: Naming of Parks and Recreation Facilities

BACKGROUND: The public sometimes suggests that parks and recreation facilities be named after persons, living or dead.

PURPOSE: To provide a systematic procedure for the naming of parks and recreation facilities, which will assist in their location by the citizenry, and to develop a method for the retention of names of historical or fiscal significance.

POLICY: As a general policy, parks and recreation facilities should be named to identify their locations. Especially for parks, the name of the community area, the names of nearby geographic features, the names of adjacent schools and street names should be given first consideration. However, they may also be named for individuals, living or dead, who are of historical significance to the local area or who have made major financial contributions in the opinion of the appropriate Recreation Councils and/or other advisory bodies, Board committees and the full Board. Facilities within parks, (such as buildings, gyms, courts, etc.) are more appropriate for naming after individuals than are parks.

Renaming a facility for a person, when that facility is already named for a person, should only be undertaken with the utmost consideration. Every attempt should be made to contact the person or heirs of the person for whom the facility is currently named, to present their views verbally, or in writing, at a public hearing.

PROCEDURE: The Recreation Council effected by the proposed name change, shall hold a public hearing to review the request and the supporting documents and information, and shall make recommendations to the Area Committees and the Park and Recreation Board on any and all recommended changes to the renaming of existing facilities.

SUBSTANTIATION: Park and Recreation Board Minutes of 6/16/1983 (page 2469)

Park and Recreation Board Minutes of 11/15/2001 (page 4)

NO. 1011

PARK AND RECREATION BOARD POLICY

SUBJECT: Graphic Presentations for the Park and Recreation Board and Committees

BACKGROUND: Graphic presentations showing preliminary designs of parks, park improvements, park related structures and facilities are regularly submitted for review and approval by the Board and its sub-committees. These graphic presentations are often the only occasion on which the Board will review and recommend approval of a project.

PURPOSE: The purpose of this policy is to establish a minimum graphic standard for use by architects, landscape architects, other consultants and staff for presentation to the Park and Recreation Board and Committees.

POLICY:

1. Presentations shall be as clear and simple as possible while still describing the total scope of the project.

2. Presentations shall be of sufficient scale and size to be easily viewed from fifteen to twenty feet away.

3. Presentation drawings shall be mounted on minimum sized 30 inch by 40 inch boards. Loose or rolled drawings are not acceptable.

4. Presentation drawings will include but not be limited to the following (as applicable):

    a. A location map.

    b. A topographic or grading plan which clearly indicates existing and proposed contours.

    c. A development plan clearly indicating on-site facilities including buildings, parking areas, play areas, lighting, landscape materials, drainage, and utilities. This plan should be in color. Critical dimensions should be included.

    d. Building presentations will include floor plan, all elevations to clearly describe the structure. The drawings shall be colored. A perspective drawing may be submitted at the Consultant's option.

5. Photographs of the site and the surrounding areas, if required to define unusual topography or features, are recommended.

6. All presentation drawings indicating site or general development plan shall have the north arrow pointing up.

7. Slide presentations will be permitted along with the above items at the Consultant's option.

8. A board with samples of actual proposed exterior materials to show true exterior colors and textures is required for building presentations.

9. A rendering of a facility may be present in lieu of elevations at the Consultant's option.

10. The basic purpose of the graphics is to describe and support a particular construction or planning project, rather than to sell or impress.

SUBSTANTIATION: Park and Recreation Board Minutes of December 21, 1976

Facilities Committee Report

NO. 1302
Revised 11/15/01

PARK AND RECREATION BOARD POLICY

SUBJECT: Park Signs and Recognition Media in Community, Neighborhood, and Open Space Parks

PURPOSE: To establish a policy and guidelines regulating design, placement and information on signs and other forms of media allowed in community, neighborhood and open space parks in order to achieve a unifying theme for signs in City of San Diego parks which strikes a balance between aesthetics and public information

BACKGROUND: On December 21, 1989, the Park and Recreation Board recommended that a policy be developed governing approval of signs within City parks. On February 10, 1993, the City Council approved the City Ventures pilot program which is aimed at encouraging sponsorship of park facilities and programs. The City Council also agreed that thanking sponsors through sign recognition or other forms of media placed at the site would be appropriate.

POLICY: It shall be the policy of the Park and Recreation Board to provide oversight for the number, wording, appearance, and size of signs and other types of media allowed in neighborhood, community and open space parks.

For open space parks, signage shall follow this policy unless, upon recommendation from an open space park task force or other appropriate body, City Council directs otherwise.

Signage which is significantly different from typical park signage due to format, size, or materials, shall be reviewed by the Design Review Committee to conform to standards within this policy. This includes informational and directional signs, permanent signs (Section A below), temporary signs (Section B below), and sponsorship recognition signs (Section C below). Deviations from said policy must be reviewed and approved by the Park and Recreation Board and the City Council.

A. Permanent Signs – defined as a sign installed on year-round basis.

1. Identification Signs – All parks should have at least one permanently installed identification sign.

a. Permanent identification sign(s) should be included in all new park construction plans. Existing parks which do not have identification sign(s) should systematically be retrofitted with permanent signs as funding becomes available.

b. Permanent identification signs for population-based park shall be monument-style and constructed of durable materials, preferably concrete, no larger than fourteen (14) feet wide and four (4) feet high.

Signs should include: the name of the park; the words "The City of San Diego, Parks and Recreation Department"; the City logo and the Department's logo. Lettering on signs should be recessed. Raised or applied letters are not recommended because of vandalism and maintenance concerns.

c. Signs should be located at major entrance(s) to each park, or within a major traffic area to ensure maximum public visibility.

d. No advertising shall be permitted on the main body of the sign. However, signs informing the public of permanent park users, such as tennis clubs and senior citizen centers, may be allowed and attached to the main sign, if such affixing can be accommodated without detracting from the primary signage. Commercial advertising shall not be permitted.

2. Facility Operator Signs – Signs permitted for permanent installation may also be granted to organizations which have been issued special agreements to operate facility in City parks on a year-round basis. Examples of such facilities are golf courses, tennis courts, snack bars and senior citizen centers. These permanent signs shall be constructed and installed in a manner that ensures public safety and shall conform to the following guidelines

a. Size of signs shall be appropriately sized to the purpose and under no circumstances shall exceed twenty-five (25) square feet.

b. Signs shall be installed on buildings operated by organizations. Placement of information or directional signs may be approved at other locations within the park as may be appropriate.

c. Wording on signs shall not infer ownership of public facilities and shall include a statement identifying the facility as "public property".

d. Sign color and lettering should be limited to earthtones or to colors which conform to existing park signage.

e. Placement of any and all signs shall be determined by the Park and Recreation Director or his/her designee.

f. Signs shall be well maintained by the organization. Graffiti or defacement shall be corrected within seven (7) days of the occurrence. The operator shall be responsible for removal of the sign at termination of the organization's agreement with the City.

g. Electrical signs shall not be permitted.

B. Temporary Signs – Are defined as those of short duration, limited to three months or less, as determined by the length of activity or event.

It shall be the policy of the Park and Recreation Board to allow temporary signage to groups or organizations which wish to notify the public concerning an event or activity which will be or is being held on park grounds.

1. Temporary signs shall be allowed under the following conditions:

a. A Sign Permit issued by the Parks and Recreation Department has been approved.

b. Signs are of professional quality. Sign material shall be of durable materials consistent with the length of time the sign will be posted.

c. Signs will be sized appropriately for purpose and under no circumstances shall exceed a size of twenty-five (25) square feet.

d. Permittee shall be responsible for the installation, maintenance and removal of the sign.

e. Advertising shall be allowed, but shall not exceed twenty-five percent (25%) of the sign's total square footage. Any product advertising shall be approved by the Park and Recreation Director or his/her designee.

f. Advertising inflatables or advertising forms not covered in this policy shall be reviewed and approved by the Park and Recreation Board and its committees.

C. Sponsorship Recognition – Defined as a sign or other type of media recognizing a sponsor of a Park and Recreation facility or program. Sign/media shall be limited to the duration of sponsorship agreement.

1. Sponsorship recognition shall be allowed under the following conditions:

a. The form and duration of recognition has been approved by the Department Director of his/her designee.

b. Media form is of professional quality and shall be of durable materials consistent with the length of time the sign will be posted.

c. Media form shall be sized appropriately for purpose and under no circumstances shall exceed a size of twenty-five (25) square feet.

d. The cost of installing, maintaining and removing the media shall be included in the sponsorship agreement.

e. Identification of sponsor shall comprise no more than 20% of sign/media and will be limited to name and logo only.

f. Forms of recognition not covered in this policy shall be reviewed and approved by the Park and Recreation Board and its committees.

SUBSTANTIATION: Park and Recreation Board Minutes of December 21, 2989, Item No. 201 (page 3055)

Park and Recreation Board Minutes of May 17, 1990, Item No. 203 (page 3081)

City Manager Report 93-37 of February 3, 1993

Park and Recreation Board Minutes of 11/15/01 (page 4)

SAMPLE IRRIGATION LEGEND					
SYMBOL	MANUFACTURER/MODEL/DESCRIPTION	PSI	RAD.	GPM	DETAIL
1	*CONSULTANT TO DESCRIBE TYPES OF HEADS*				I-1 TO I-3
2	*AND ASSIGN IDENTIFICATION NUMBERS.*				
3	*SPECIAL SYMBOLS MAY BE USED FOR DRIP*				
4	*AND OTHER SPECIAL HEADS WITH PRIOR*				
5	*APPROVAL BY THE PARK AND RECREATION*				
6	*DEPARTMENT.*				
W	WATER METER				WS-01/WS-02
	REDUCED PRESSURE BACKFLOW PREVENTER				WR-01/WR-02
Y	WYE STRAINER				I-14 (SIMILAR)
P	PRESSURE REGULATING VALVE				I-14 (SIMILAR)
MV	IRRIGATION MASTER VALVE (NORMALLY OPEN)				I-10
F	FLOW SENSOR (DETAIL PER MAN., CONCRETE VALVE BOX)				
	REMOTE CONTROL VALVE				I-14, I-33
	GATE VALVE (2" & SMALLER)(2.5" & LARGER, PROVIDE DETAIL)				I-13
	GLOBE VALVE				I-13, I-33
	QUICK COUPLING VALVE (1" SIZE)				I-5, I-33
	AUTOMATIC IRRIGATION CONTROLLER				I-17, I-18
	DIRECT BURIAL CONTROL WIRE (SOLID COPPER, COLOR CODED)				I-16
PB	PULL BOX (LOW VOLT.=LOCKING LID/HIGH VOLT.=BOLTDOWN LID)				I-15
	PVC MAIN LINE-CLASS 315 FOR 2" AND LARGER WITH SCH. 80 FITTINGS OR BELL SOLVENT WELD, SCH. 40 FOR 1-1/2" SIZE, 21" DEPTH				I-25, I-26
	PVC LATERAL LINE-SCH. 40, 3/4" MIN. SIZE, 15" DEPTH				I-25
G.I.	GALVANIZED IRON PIPE-SCH. 40				I-20 TO I-24
CU	TYPE "L" COPPER PIPE				I-25
P	POTABLE WATER LINE				
	PVC SCH. 40 SLEEVE, 2 X DIAMETER OF PIPE OR WIRE BUNDLE TO BE SLEEVED, MINIMUM 2" SIZE				
POC	POINT OF CONNECTION				

APPROVED MANUFACTURERS AND PRODUCTS LIST

This list is updated on a yearly basis. To obtain the current list contact Administrative Services, Parks and Recreation Department, (619) 533-6597.

A. IRRIGATION MATERIALS

1. Reduced Pressure Backflow Preventers

Backflow preventers shall be selected from the City of San Diego Public Utilities Department approved list found at https://www.sandiego.gov/sites/default/files/final_draft_of_instruction_standard_drawing_9.1_0.pdf

2. Backflow Preventer Enclosures (stainless steel, free of burs and sharp edges)

- Coast Guard Shack
- All-Spec Vandal Buster series
- VIT Box "Smooth Touch" SBBC-SS

3. Irrigation Controller Assemblies

All irrigation controllers shall be a part of an assembly that is pre-fabricated by the supplier, and shall include a stainless-steel backboard, on/off toggle switch to turn off power to the controller, a duplex power outlet (live even when the controller power is turned off), and a terminal strip. A stainless-steel enclosure shall be used when the controller assembly is located outdoors or in an unsecured location. The enclosure shall be minimum 14-gauge stainless steel. The enclosure should be omitted when the controller assembly is located indoors in a secured location. The controller assembly shall have a five-year extended warranty for the entire assembly. Approved irrigation controller models include:

- Irritrol MC-E
- Rain Bird ESP (MC Series)
- Rain Master Sentar II, Eagle, Eagle-I, Evolution
- Cal Sense ET2000e
- Toro Sentinel
- Toro Battery Operated DDCWP (ONLY if power is not available)
- DIG Corporation LEIT controller (ONLY if power is not available)

4. Irrigation Controller Enclosures (stainless steel only, 14 gauge minimum)

- All Spec AS-SS
- La Max
- Strong Box
- Rain Man
- Cal Sense SSE

5. Pressure Reducing Valves (pilot operated, stainless steel trim)

- CLA-VAL #90-01BS
- Wilkins 500/500HR series
- Wilkins 600/600HR series
- Watts 25 AUB Series

6. **Master Control Valves** (24 volt, electric, brass/bronze, normally open)
   - Griswold 2160E
   - Superior 3100
   - Superior 3300DW-E

7. **Flow Sensing Devices**
   - Badger Model IR-220P
   - Calsense FM Series

8. **Isolation Valves**

   Globe Valves – 2 Inch and Smaller (bronze with bronze cross handle)
   - Champion #100
   - Buckner #22000
   - Nibco T-211-YK

   Gate Valves – 3 Inch and Smaller (brass or bronze with bronze cross handle)
   - Nibco T-113-K Series
   - Matco 513-T Series

   Gate Valves – 4 Inch and Larger (cast iron)
   - Clow
   - Mueller #100-011
   - I.O.W.A.

9. **Locking Cap for Isolation Valve Access Sleeves**
   - Weathermatic 906L

10. **Remote Control Valves (24-volt electric, brass, normally closed)**
    - Rain Bird EFB-CP Series
    - Rain Bird EFB-CP-R Series (Reclaimed)
    - Superior 950-DW with SD Option
    - Griswold DWS
    - Griswold DW-PRS Series
    - Hunter IBV Series

11. **Quick Coupling Valves and Keys**

    Potable Irrigation Use
    - Rain Bird #44-LRC
    - Buckner #QB44LRC10

    Keys for Potable Irrigation Use (single lug)
    - Rain Bird #44K
    - Buckner #QB44K10

    Recycled Water Use (Acme threaded)
    - Toro #100-ATLVC
    - Nelson #7645

    Keys for Recycled Water Use (Acme thread, single lug)
    - Toro #100-AK
    - Nelson #7641

12. **Irrigation Boxes** (concrete with cast iron locking lid)
    - Brooks 3-HL
    - San Diego Precast 3HL
    - J & R 3HL

13. **Irrigation Heads (all rotor heads to have stainless steel risers)**

    Large Radius Rotor Heads
    - Hunter I-40 Ultra SS (with factory installed nozzles)
    - Hunter I-40 Ultra SS ON (with factory installed nozzles)
    - Rain Bird Falcon 6504

    Medium Radius Rotor Heads
    - Hunter I-25 Ultra SS (with factory installed nozzles)
    - Rain Bird Falcon 6504

    Small Radius Rotor Heads
    - Hunter I-20 Ultra SS (with factory installed nozzles)

    Rotary Nozzles (for turf and shrub areas)
    - Hunter MP Rotator
    - Rain Bird R-VAN
    - Toro Precision Series

    Shrub Fixed Spray Adapters
    - Hunter PROS-00 shrub adapter
    - Rain Bird PA-8S shrub adapter
    - Rain Bird PA-8S PRS (pressure regulating riser)
    - Toro 570 shrub adapter

    Shrub & Turf Pop-Up Spray Body
    - Hunter Pro-Spray PRS30/PRS40
    - Rain Bird RD1800 SAM PRS
    - Toro 570Z-PRX

    Bubblers - Pressure Compensating Flood Type
    - Hunter PCN/PCB Series
    - Rain Bird 1400 Series
    - Toro FB Series

    Stream Bubblers
    - Hunter MSBN Series
    - Rain Bird 5 Series
    - Toro SB Series

14. **Anti-Drain/Excess Flow Valves**
    - Valcon #ADV-XS, #ADV
    - King Brother's KBI
    - Hunter HCV

15. **Pipe and Fittings** (Cast iron fittings/ductile iron fittings for mainline - (AWWA-C110) short body/cement lined)
    - Dayton Foundry
    - Tyler Pipe and Foundry
    - Leemco-Slant Bell Fittings

    Cast Iron Joint Restraints
    - Leemco

    Polyvinyl Chloride Pipe (PVC)
    - EPCO
    - Pacific Plastic
    - JM Eagle
    - Apache
    - Brownline (UV stabilized, above grade only)
    - Alertline (Recycled Water)
    - Waterwarn (Recycled Water)

    Polyvinyl Chloride Pipe (PVC) Fittings:
    - Dura
    - Lasco
    - Sloan
    - Plastiline
    - Spears

16. **Trench Marker Tape**
    - Allen Marking Tape
    - Christy's
    - Paul Potter Warning Tape, Inc. 'Alarmatape'

17. **Wire Connectors (epoxy filled)**
    - Dri-Splice DS 100 with DS 300 Epoxy Sealant

18. **Rain Shut-Off Switch**
    - Hunter – Mini Click with Sensor Guard Enclosure
    - Rain Bird RSD

19. **Drip Irrigation Equipment**

    Drip irrigation equipment shall be reviewed and approved by the Parks and Recreation Department's District Manager prior to the design of the irrigation system.

B. SITE FURNITURE

1. Picnic Tables

- Oldcastle Precast
- Quick Crete
- Outdoor Creations, Inc.
- Wausau Tile
- Dura Art Stone

2. Benches

- Oldcastle Precast
- Quick Crete
- Outdoor Creations
- Wausau Tile
- Dura Art Stone

3. Drinking Fountains

- Haws #3150 pedestal mounted concrete drinking fountain
- Haws #3500/3500D pedestal mounted drinking fountain with/without dog bowl

4. Barbecues

- Little Tikes
- Burke
- Miracle
- Outdoor Creations

5. Ash Urns

- Oldcastle Precast
- Quick Crete
- Dura Art Stone
- Outdoor Creations, Inc.

6. Bicycle Racks

- Oldcastle Precast
- Hanson
- Burke

7. Trash Receptacles and Ash Urns

- Oldcastle Precast
- Quick Crete
- Dura Art Stone
- Outdoor Creations, Inc.
- Wausau Tile

C. MULTI-PURPOSE FIELDS

<u>3-seat Bleacher (no guardrails) and 5-seat Bleacher (with guardrails):</u>

- Kay Park or approved equal (all steel construction)

D. PLAY EQUIPMENT

1. Play Area Safety Surfacing

- Architect's Choice Kids Turf (engineered wood fiber)
- Fibar (engineered wood fiber)
- Playbound by Surface America (poured-in-place rubberized safety surfacing)
- Playsafe (poured-in-place rubberized safety surfacing)
- TotTurf by Robertson Industries (poured-in-place rubberized safety surfacing)
- TotTurf Supreme by Robertson Industries (poured-in-place rubberized safety surfacing)
- SpectraTurf SpectraPour
- SpectraTurf SpectraPour Supreme

2. Play Equipment

- Burke
- Columbia Cascade
- Gametime
- Little Tikes
- Landscape Structures
- Miracle Recreation Equipment Company
- Kompan (metal structures only)
- Play and Park Structures
- Playcraft Systems

3. Physical Fitness Equipment

- Gametime
- Miracle
- Quality Industries, Inc.
- Landscape Structures, Inc.

4. Climbing Rocks

- Landscape Structures, Inc.
- Rockraft Designs

E. COMFORT STATIONS AND RECREATION CENTERS

1. Mission Bay Park Building Colors (All colors by Ameritone)

<u>Wall and Trim Colors:</u>

- Dove Gray #298d
- Atoll Gray #197E
- Larkspur #261D
- Bone White #2990-8J
- Feather Gray #297F
- Stone #195d
- Nougat #W44
- Mushroom #W14

Trim Colors:
- Hunter Green #181a
- Dutch Blue #262A
- Chocolate #191A
- Umber Brown #297A

2. Balboa Park Building Colors
- Main Color: Sherwin Williams 'Western Reserve Beige', SW 2052
- Ornamentation Color: Sherwin Williams 'Carefree Coral'; SW 2178

3. Toilet Paper Dispensers
- Aslin Industries

F. PLANTING

1. Turf Seed Mix
- 20% Common Bermuda*
- 10% Hybrid Bermuda (Bermuda Shorts, Yuma, Blackjack or Sahara)*
- 10% 'Barclay' Perennial Rye
- 60% 'Turfstar' Perennial Rye

* Hulled seeds when applied April through September
Unhulled seeds when applied October through March

OR

- Agrono-tec Ballfield Mix #2A; OR
- OreGro Sports Mix #2

2. Turf Sod Mix **
- Tifway Bermuda; or
- Tifway II Bermuda; or
- GN-1 Bermuda

** Hybrid Bermuda sods that do not contain perennial rye shall be over seeded with 'Grand Slam' or 'Turfstar' Perennial Rye, at a rate of 5 lbs./1,000 square feet.

G. GRAFFITI PROTECTION

1. Vertical and Horizontal Surfaces

Anti-graffiti coating for horizontal and vertical surfaces shall be as manufactured by Coval Molecular Coatings, 5341 Old Redwood Highway, Petaluma, CA 94954.

1st Coat: Quick Seal & Enhance
2nd Coat: Concrete Coat (specify Satin or Gloss finish)

2. Vertical Surfaces Only

Anti-graffiti coating for vertical surfaces only shall be as manufactured by Monopole Inc. Materials shall be applied as specified below:

1st Coat:	Aquaseal ME12 (Item 5200)
2nd Coat:	Permashield Base (Item 6100)
3rd Coat:	Permashield Premium (Item 5600 for matte finish or Item 5650 for gloss finish)
4th Coat:	Permashield Premium (Item 5600 for matte finish or Item 5650 for gloss finish)

Standard Park Details

The following standard park details are available in electronic format upon request. Please contact the Administrative Services Division of the Parks and Recreation Department at (619) 533-6597 for assistance.

Detail A-1	Multi-Purpose Court Striping - Plan View
Detail A-2	Multi-Purpose Court Striping Notes
Detail A-3	Multi-Purpose Court Color Coating - Plan View
Detail A-4	Basketball Key Striping - Plan View
Detail B-1	Tennis Court Layout - Plan View
Detail B-2	Tennis Court Color Coating - Plan View
Detail C-1	Softball Field - Plan View
Detail C-2	Softball Backstop - Side Elevation
Detail C-3	Softball Backstop - Rear Elevation
Detail C-4	Softball Backstop - Plan View
Detail C-5	Softball Backstop - Post Detail
Detail C-6	Softball Backstop Batter Board and Footings
Detail C-7	Softball Backstop Dugout - Plan View
Detail C-8	Softball Backstop Dugout - Section View
Detail C-9	Softball Backstop Notes
Detail C-10	Softball Backstop Fencing Notes
Detail D-1	Tot Lot Safety Surfacing - Section View
Detail D-2	Tot Lot Safety Surfacing Turn-down - Section View
Detail D-3	Tor Lot Safety Surfacing Color Joints - Section View
Detail D-4	Tot Lot Edging at Sand - Section View

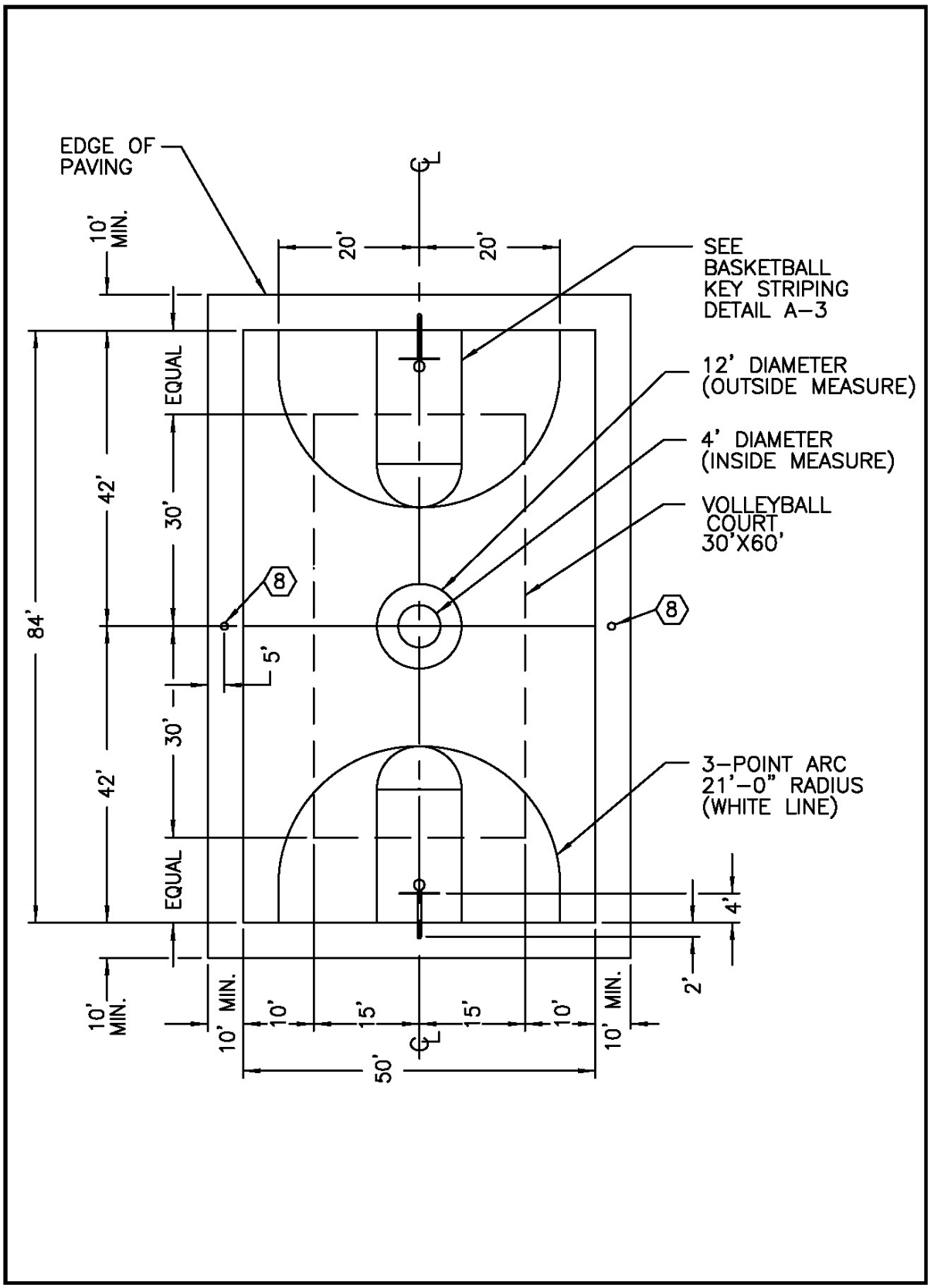

Detail A-1: Multi-Purpose Court Striping (Basketball/Volleyball) - Plan View

NOTES:

1) BASKETBALL COURT STRIPING SHALL BE 2" WIDE AND COLORED WHITE.

2) VOLLEYBALL COURT STRIPING SHALL BE 1-1/2" WIDE AND COLORED YELLOW (COURTLINES ARE SHOWN DASHED FOR CLARITY ONLY).

3) DIMENSIONS ARE TO THE OUTSIDE EDGE OF THE LINES UNLESS INDICATED OTHERWISE.

4) THE WHITE LINE SHALL DOMINATE WHERE WHITE AND OTHER COLORED LINES INTERSECT.

5) CONTRACTOR SHALL BE RESPONSIBLE FOR COURT LAYOUTS.

6) BASKETBALL GOAL POSTS SHALL BE SET 2' BEYOND BASELINE WITH 6' EXTENSIONS. RIM HEIGHT SHALL BE 10' ABOVE FINISH SURFACE OF COURT.

7) SEE COLOR COATING DETAIL A-2 FOR COLORS.

⟨8⟩ PROVIDE VOLLEYBALL POST SLEEVES IF COURTS ARE MULTI-PURPOSE, (2) PLACES.

Detail A-2: Multi-Purpose Court Striping Notes

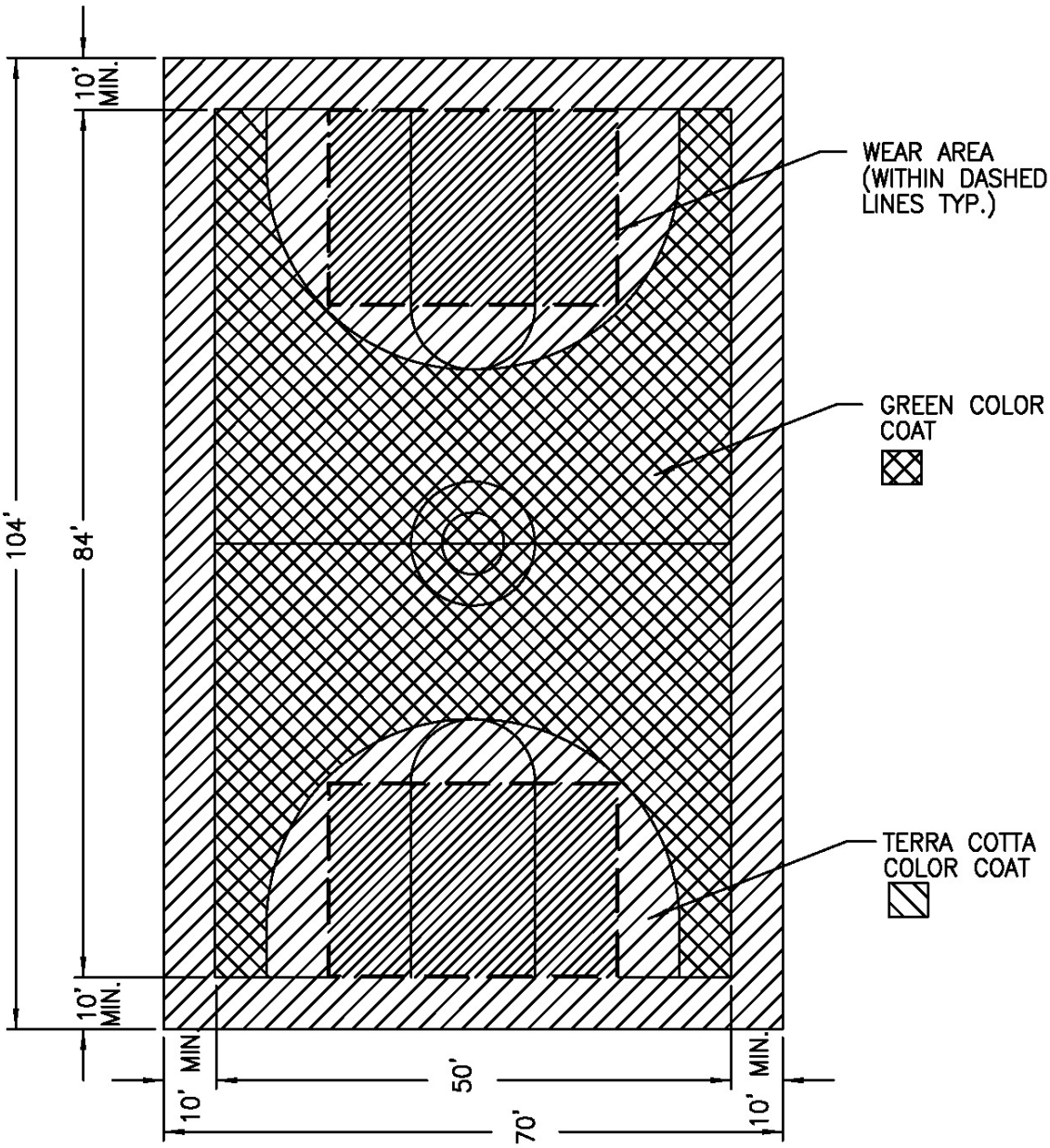

1) WEAR AREA TO RECEIVE ADDITIONAL COAT OF COURT SURFACING.

2) TERRA COTTA COLOR COAT EXTEND TO EDGES OF PAVING UNLESS OTHERWISE NOTED.

Detail A-3: Multi-Purpose Court Color Coating - Plan View

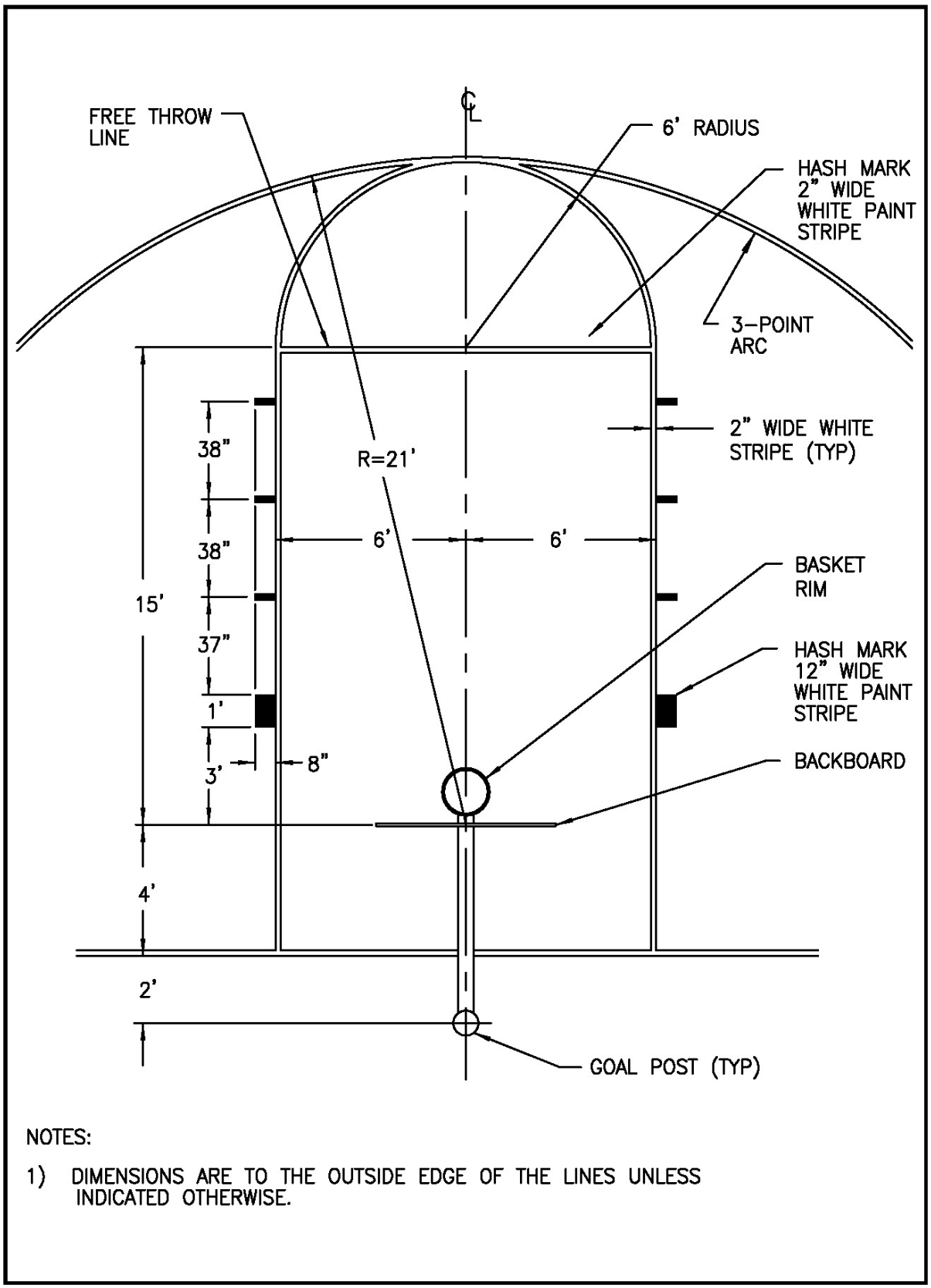

Detail A-4: Basketball Key Striping - Plan View

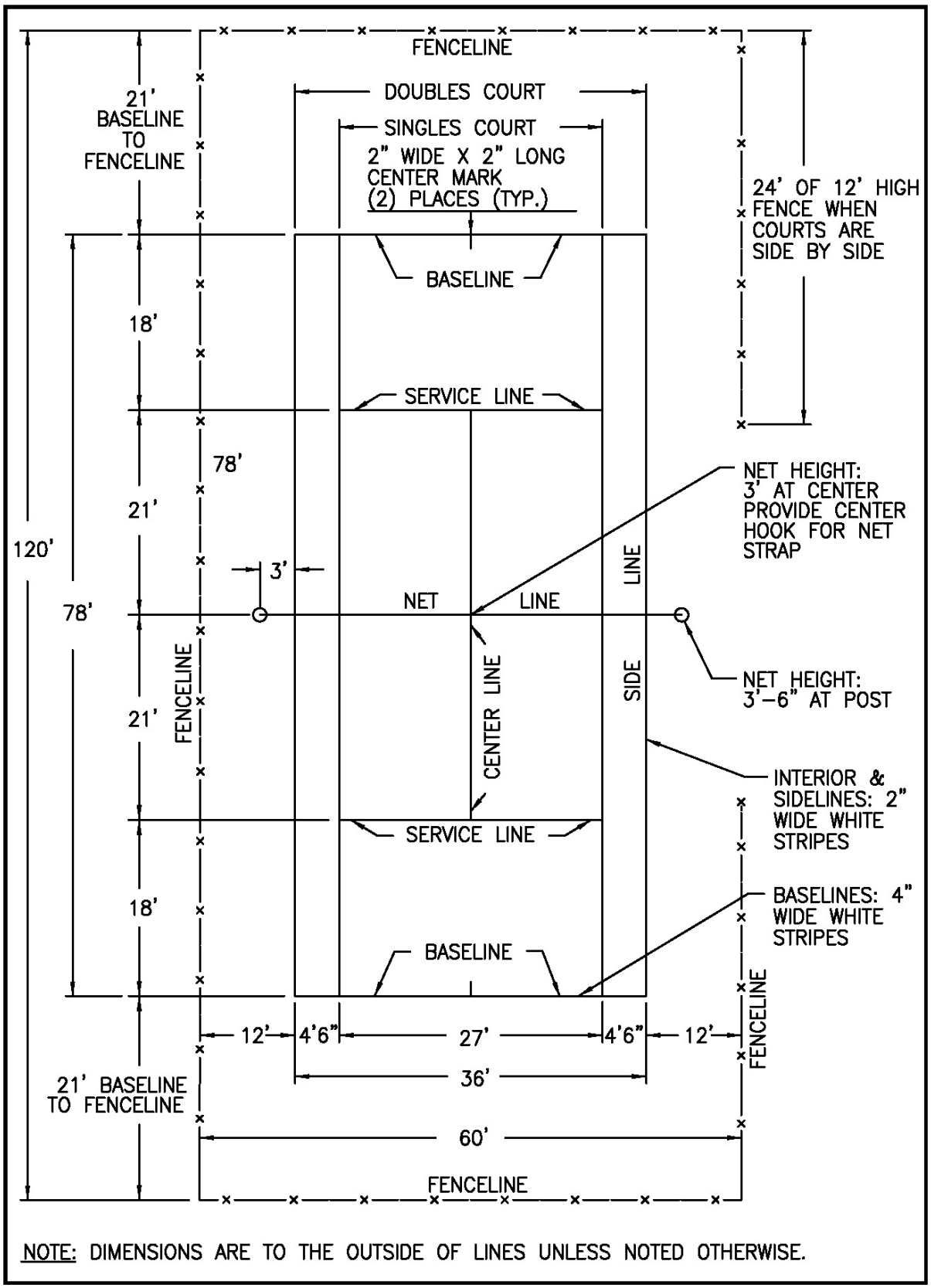

Detail B-1: Tennis Court Layout - Plan View

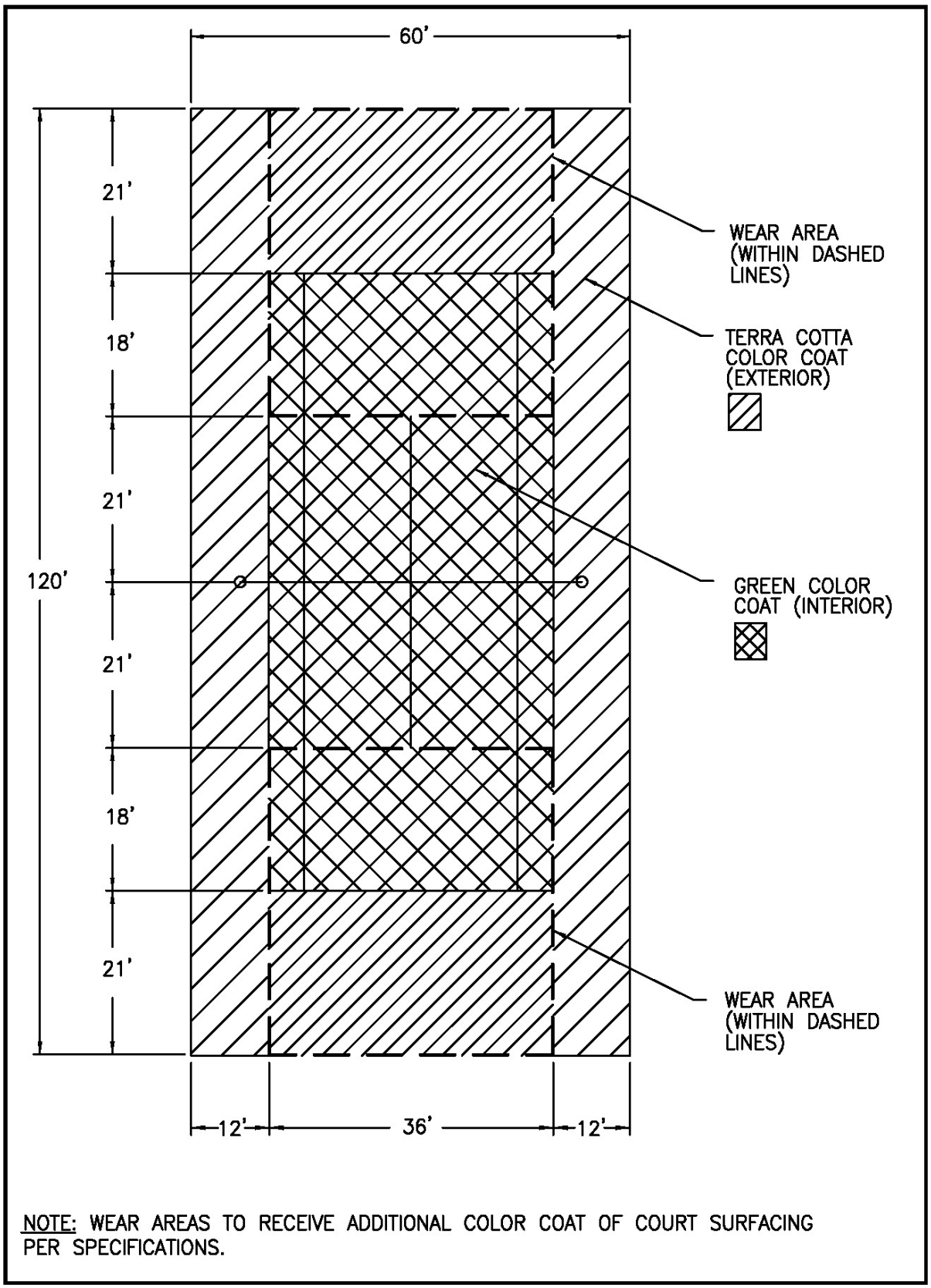

Detail B-2: Tennis Court Color Coating - Plan View

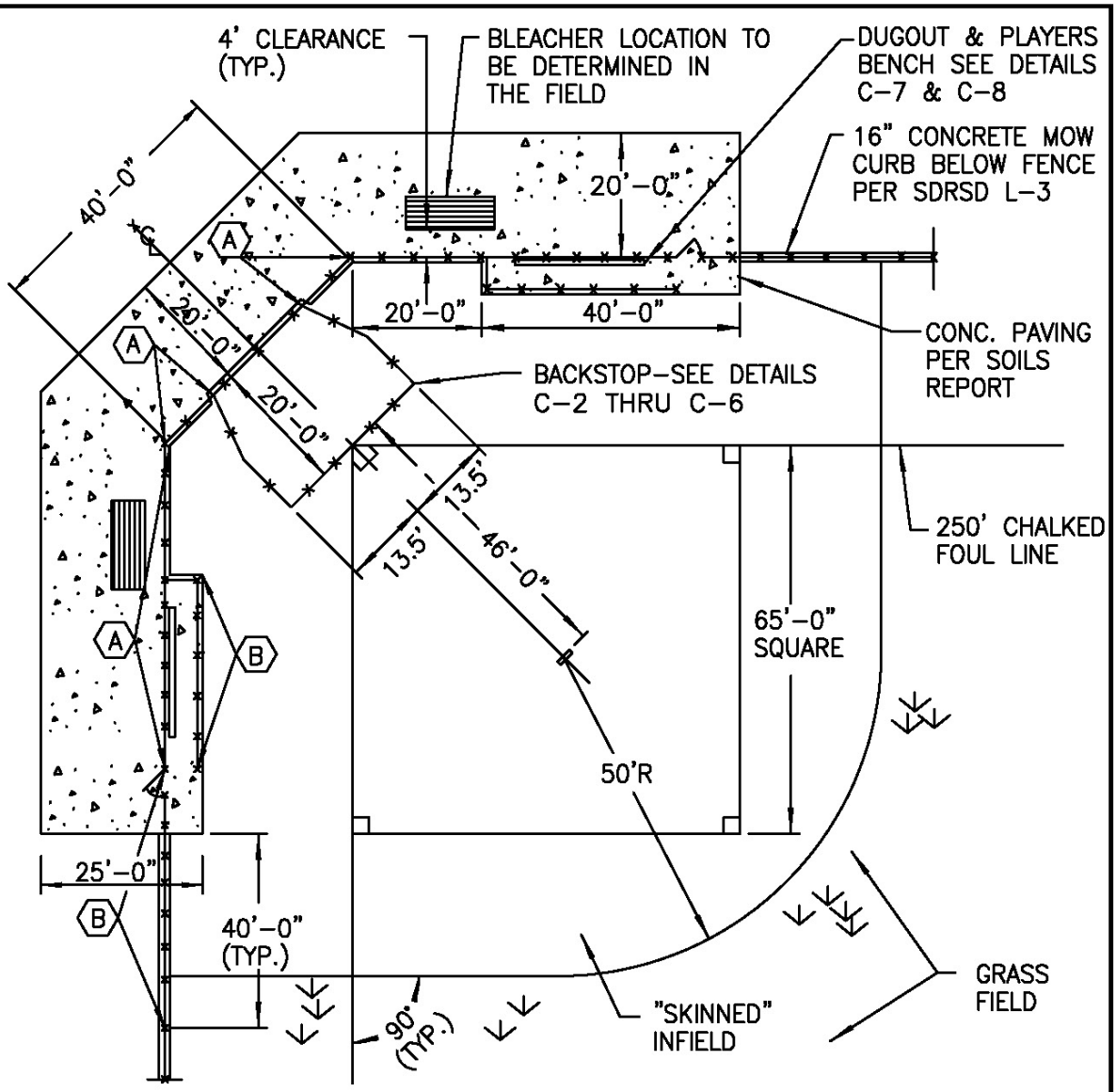

NOTES:

1) BACKSTOP AREA IS SYMMETRICAL ABOUT THE CENTER LINE, EXCEPT AS NOTED ABOVE.

2) DIMENSIONS ARE TO CENTER LINE OF FENCE POSTS.

3) CONTRACTOR SHALL INSTALL HOME PLATE AND PLACE GUINEAS AT BASE LOCATIONS FOR FUTURE BASES (BASES BY OTHERS).

4) TIE BACKSTOP IN AS PART OF FENCE, SEE BACKSTOP NOTES.

5) SEE FENCING NOTES.

(A) 12' HIGH BLACK VINYL CHAIN LINK FENCE AND POSTS PER SDRSD SDM-112.

(B) 8' HIGH BLACK VINYL CHAIN LINK FENCE AND POSTS PER SDRSD SDM-112.

Detail C-1: Softball Field - Plan View

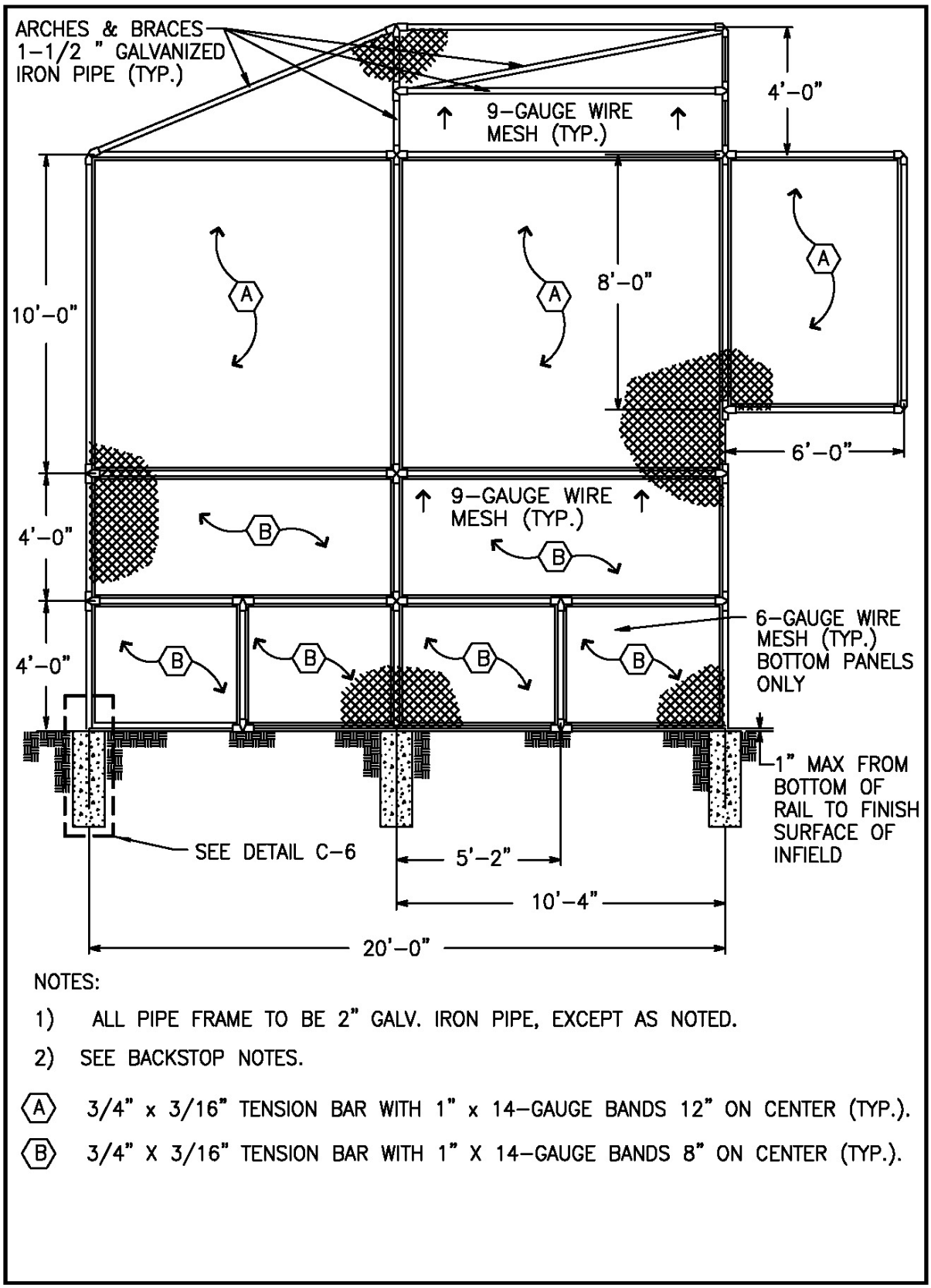

Detail C-2: Softball Backstop - Side Elevation

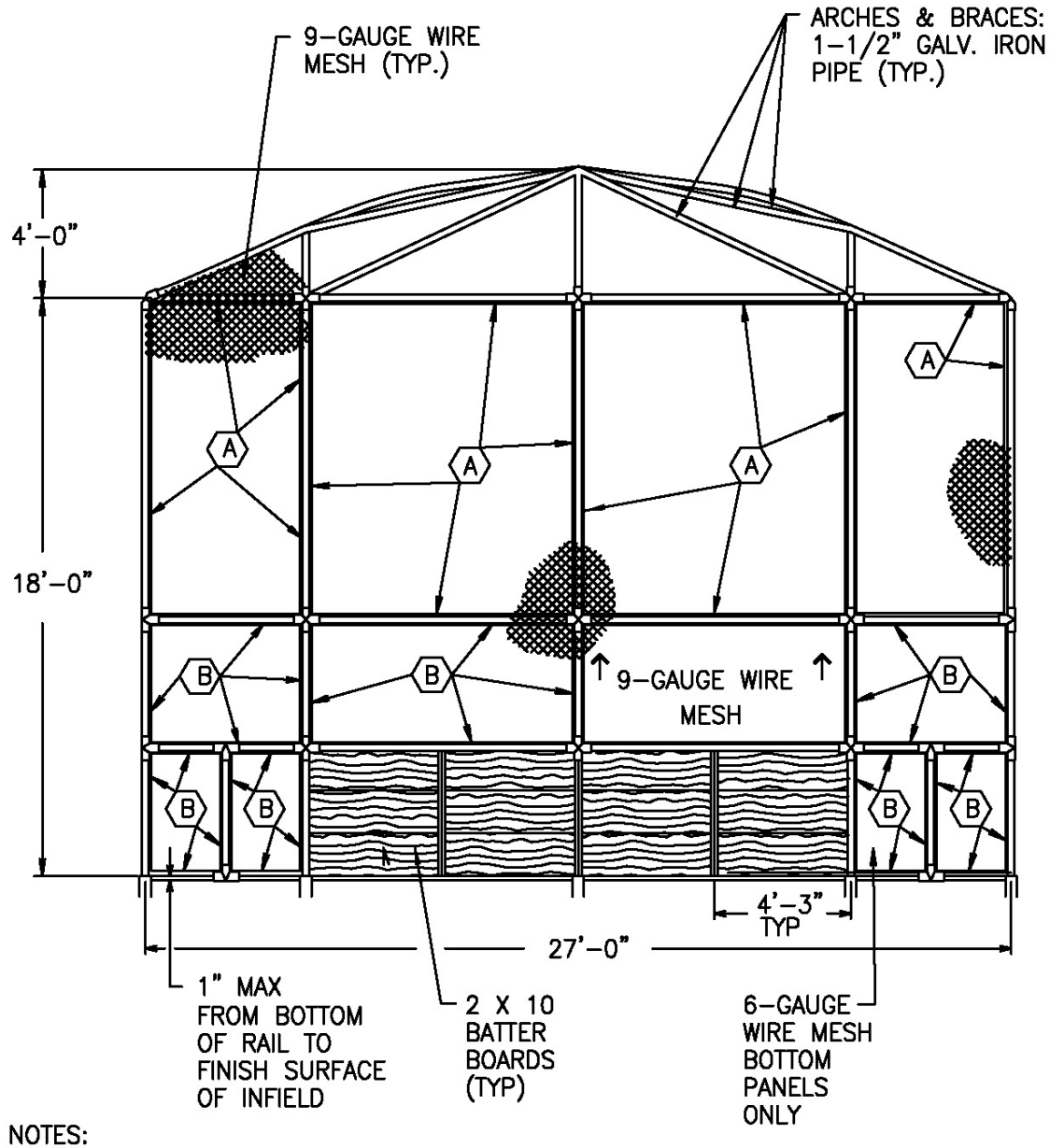

NOTES:

1) ALL PIPE FRAME TO BE 2" GALVANIZED IRON PIPE, EXCEPT AS NOTED ABOVE.

2) SEE BACKSTOP NOTES.

(A) 3/4" X 3/16" TENSION BAR WITH 1" X 14-GAUGE BANDS 12" ON CENTER (TYP.).

(B) 3/4" X 3/16" TENSION BAR WITH 1" X 14-GAUGE BANDS 8" ON CENTER (TYP.).

Detail C-3: Softball Backstop - Rear Elevation

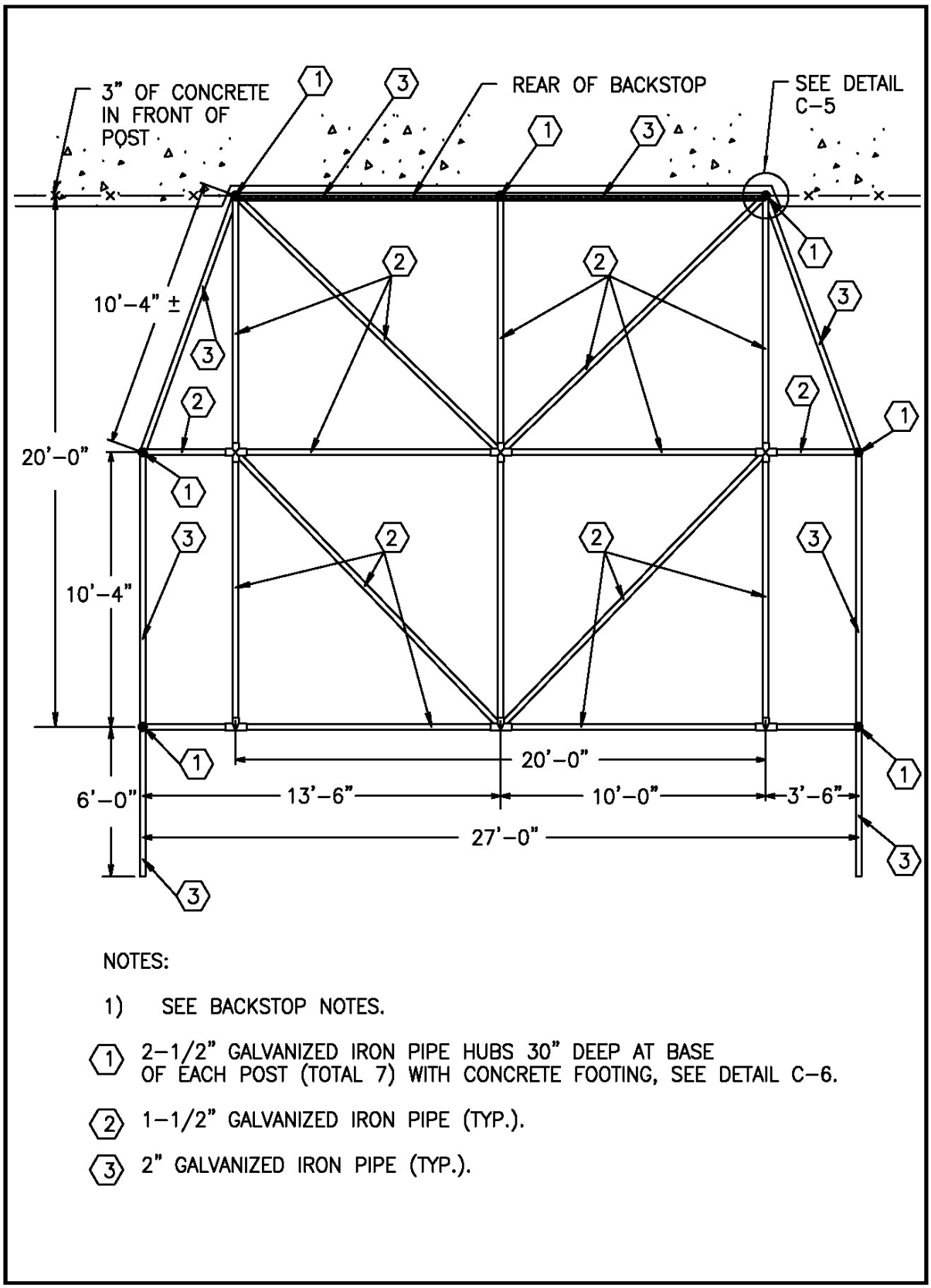

Detail C-4: Softball Backstop - Plan View

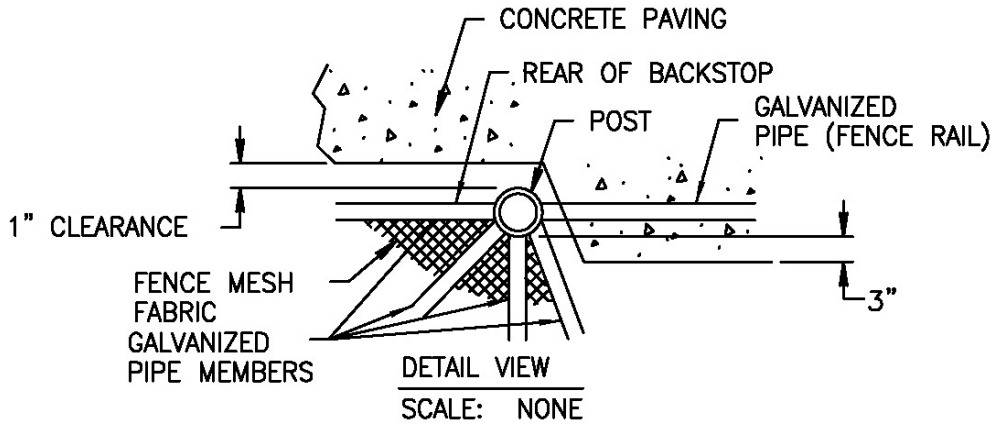

Detail C-5: Softball Backstop - Post Detail

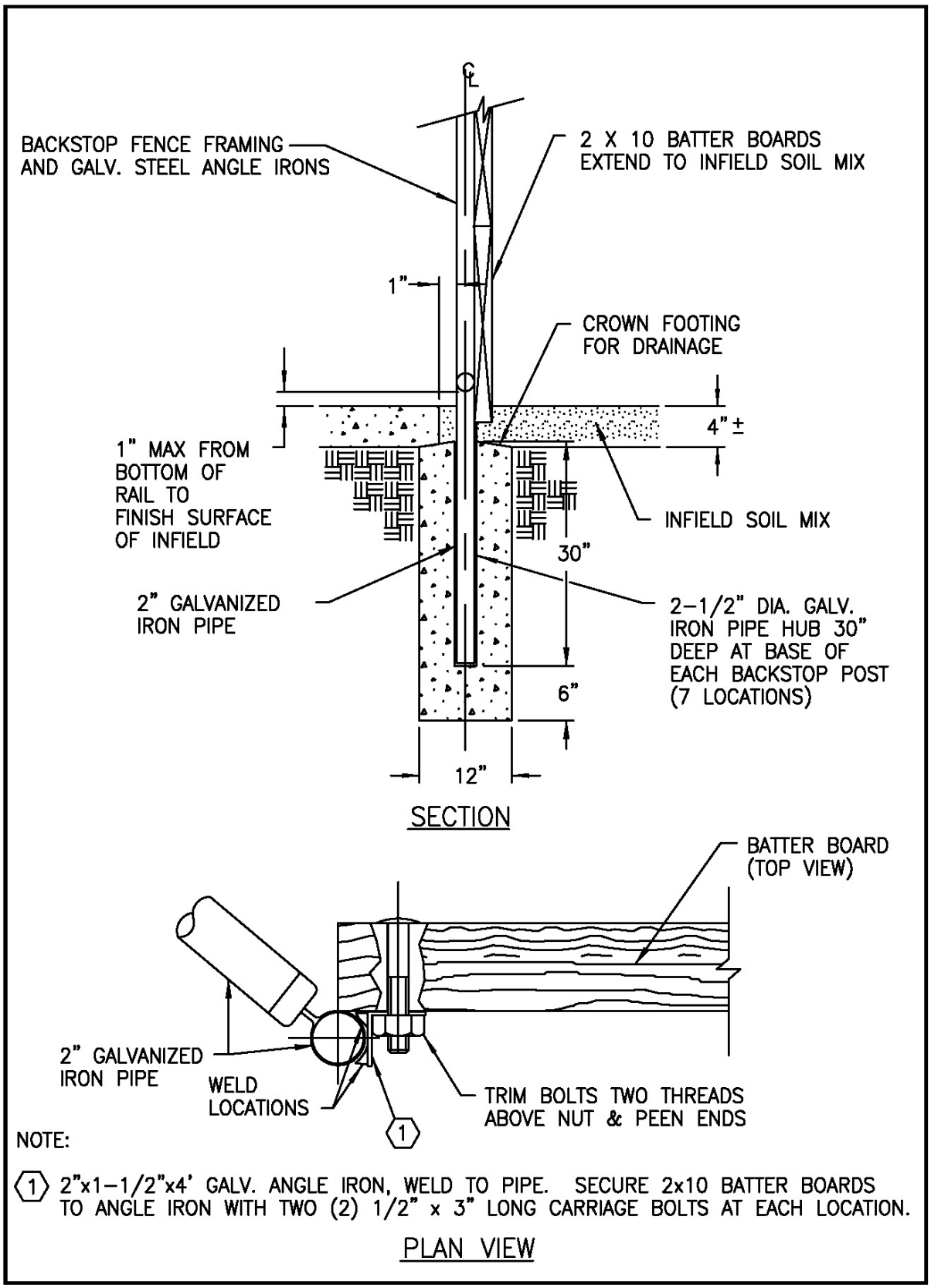

Detail C-6: Softball Backstop Batter Board and Footings

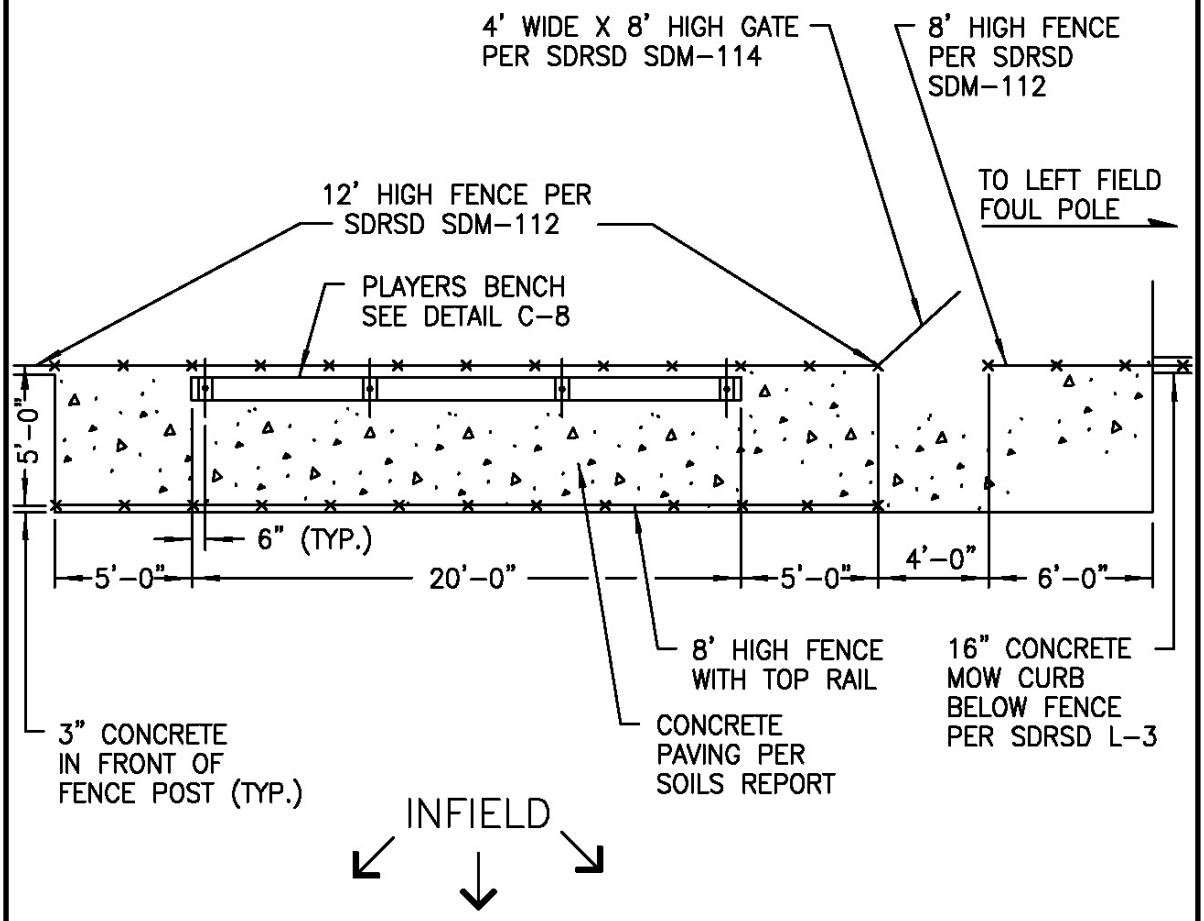

NOTE:

1) SEE FENCING NOTES.

2) DETAIL SHOWN ABOVE INDICATES "VISITORS" DUGOUT, THIRD BASE SIDE. THE "HOME" TEAM DUGOUT, FIRST BASE SIDE, IS A MIRROR IMAGE.

Detail C-7: Softball Backstop Dugout - Plan View

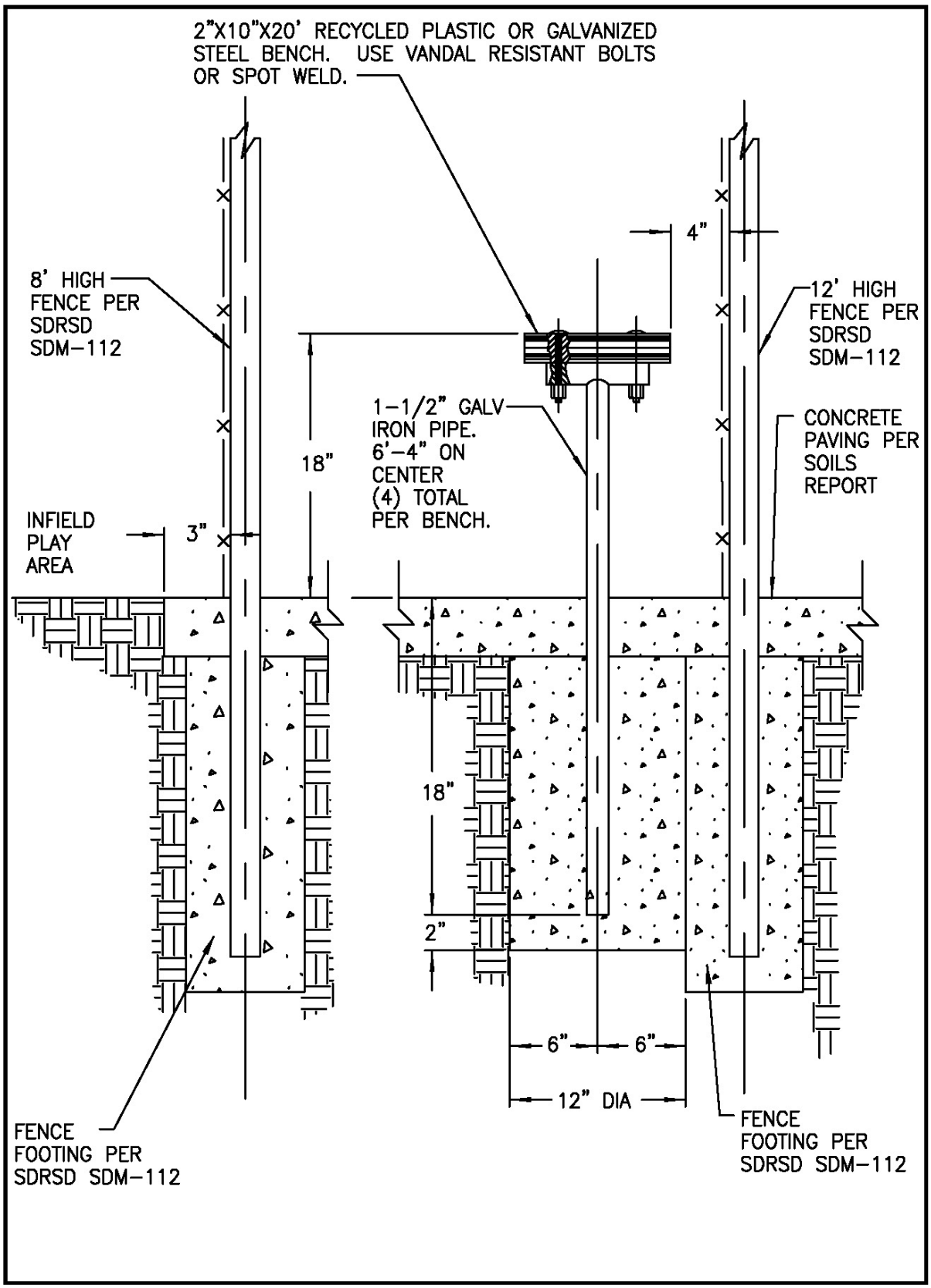

Detail C-8: Softball Backstop Dugout - Section View

BACK STOP NOTES:

1) WHERE BACKSTOP ABUTS ANOTHER CHAIN LINK FENCE, THE BACKSTOP SHALL BE PART OF THAT FENCE.

2) ALL UPRIGHT POSTS AND HORIZONTAL RAILS SHALL BE 2" NOMINAL DIAMETER GALVANIZED IRON WELDED (5/16" BEAD) ALL AROUND AT EVERY JOINT.

3) ALL MEMBERS OF THE TOP (ARCHES AND BRACES) SHALL BE 1–1/2" NOMINAL DIAMETER GALVANIZED IRON PIPE WELDED (5/16" BEAD) ALL AROUND AT EVERY JOINT.

4) CHAIN LINK FABRIC SHALL BE 9–GUAGE STEEL WIRE GALVANIZED AFTER FABRICATION, EXCEPT THAT THE LOWER 4' OF THE BACKSTOP SHALL BE 6–GAUGE STEEL WIRE GALVANIZED AFTER FABRICATION. ALL CHAIN LINK FABRIC SHALL BE 2" MESH.

5) CHAIN LINK FABRIC SHALL BE MOUNTED ON THE INSIDE OF THE BACKSTOP.

6) ALL WELDED JOINTS SHALL BE WIRE BRUSHED CLEAN AND PAINTED WITH TWO (2) COATS OF ZINC OXIDE PAINT ("GALVALOY" OR APPROVED EQUIVALENT).

7) ALL NUTS SHALL BE CUT TWO (2) THREADS ABOVE THE NUT AND PEEN ENDS.

8) ALL WOOD TO BE DOUGLAS FIR "SELECT" WITH NO KNOTS, SPLITS, OR SAP POCKETS. BOARDS SHALL BE STRAIGHT AND TRUE.

9) ALL ANGLE IRON SHALL BE GALVANIZED.

10) ALL CONCRETE SHALL BE PER THE SOILS REPORT.

11) BOTTOM RAIL OF BACKSTOP SHALL BE A MAXIMUM OF 1" ABOVE FINISH GRADE.

12) BATTER BOARDS SHALL COVER INSIDE OF CONCRETE SLAB AND EXTEND INTO FINISH GRADE OF INFIELD SOIL MIX.

Detail C-9: Softball Backstop Notes

FENCING NOTES:

1) GATES SHALL HAVE STOP PLATES AND WELDED LATCHING.

2) ALL CHAIN LINK FENCE FABRIC SHALL BE 9-GAUGE WIRE, 2" MESH GALVANIZED.

3) ALL CHAIN LINK FENCE FABRIC, POSTS, RAILS, AND FITTINGS, EXCEPT BACKSTOP, SHALL BE BLACK VINYL COATED.

4) ALL CHAIN LINK FENCE SHALL HAVE A TOP AND BOTTOM RAIL. CHAIN LINK FENCE SHALL BE CONSTRUCTED WITH A MID-RAIL IF TALLER THAN 8'.

5) ALL CHAIN LINK FABRIC SHALL BE MOUNTED ON THE SIDE OF THE POSTS TOWARD THE PLAYING FIELD.

6) ALL FENCE POSTS, BRACES, AND RAILS SHALL CONSIST OF NEW GALVANIZED PIPE MANUFACTURED IN ACCORDANCE WITH A.S.T.M. DESIGNATION A-120 AND SHALL BE THE FOLLOWING SIZES AND WEIGHTS BELOW:

FENCES 72" HIGH AND OVER:

POST LOCATION	NOMINAL DIA. IN.	OUTSIDE DIA. IN.	INSIDE DIA. IN.	WT. PER FOOT LBS.
END AND CORNER	2-1/2	2.875	2.469	5.79
LINE POSTS	2	2.375	2.067	3.65
BRACES & RAILS	1-1/4	1.660	1.380	2.27

FENCES LESS THAN 72" HIGH:

POST LOCATION	NOMINAL DIA. IN.	OUTSIDE DIA. IN.	INSIDE DIA. IN.	WT. PER FOOT-LBS.
END AND CORNER	2	2.375	2.067	2.65
LINE POSTS	1-1/4	1.900	1.610	2.72
BRACES & RAILS	1-1/4	1.660	1.380	2.27

7) ALL HARDWARE, TENSION WIRE, TIE WIRE, TRUSS RODS, AND GATES, SHALL CONFORM TO THE APPLICABLE PARTS OF STANDARD DRAWINGS SDM-100, SDM-112, M-5, M-6, M-17, SECTIONS 206-6 AND 304 OF THE STANDARD SPECIFICATIONS FOR PUBLIC WORKS CONSTRUCTION ("GREENBOOK").

8) ALL NUTS SHALL BE CUT TWO (2) THREADS ABOVE THE NUT AND PEEN ENDS.

Detail C-10: Softball Backstop Fencing Notes

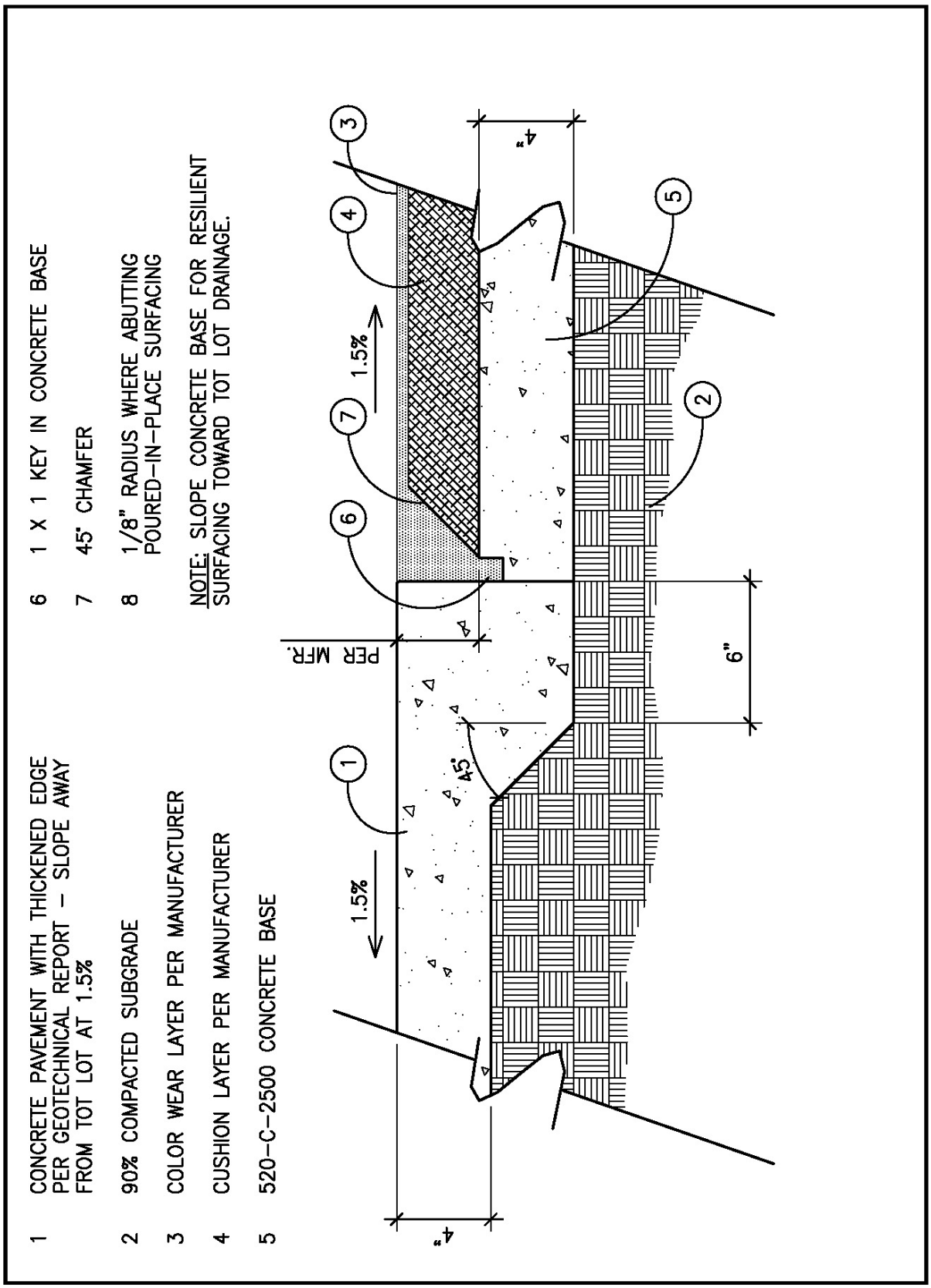

Detail D-1: Tot Lot Safety Surfacing - Section View

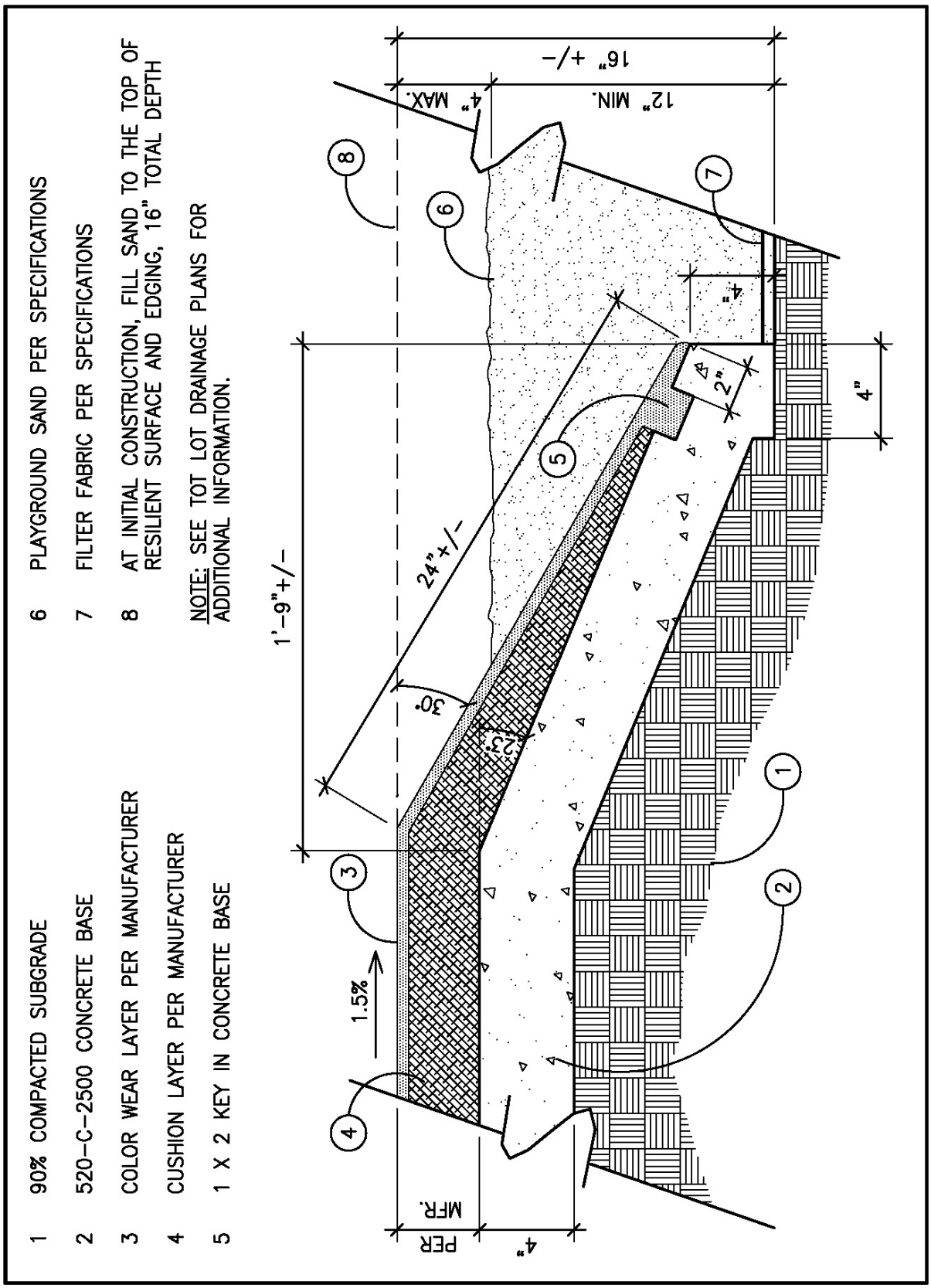

Detail D-2: Tot Lot Safety Surfacing Turn-down – Section View

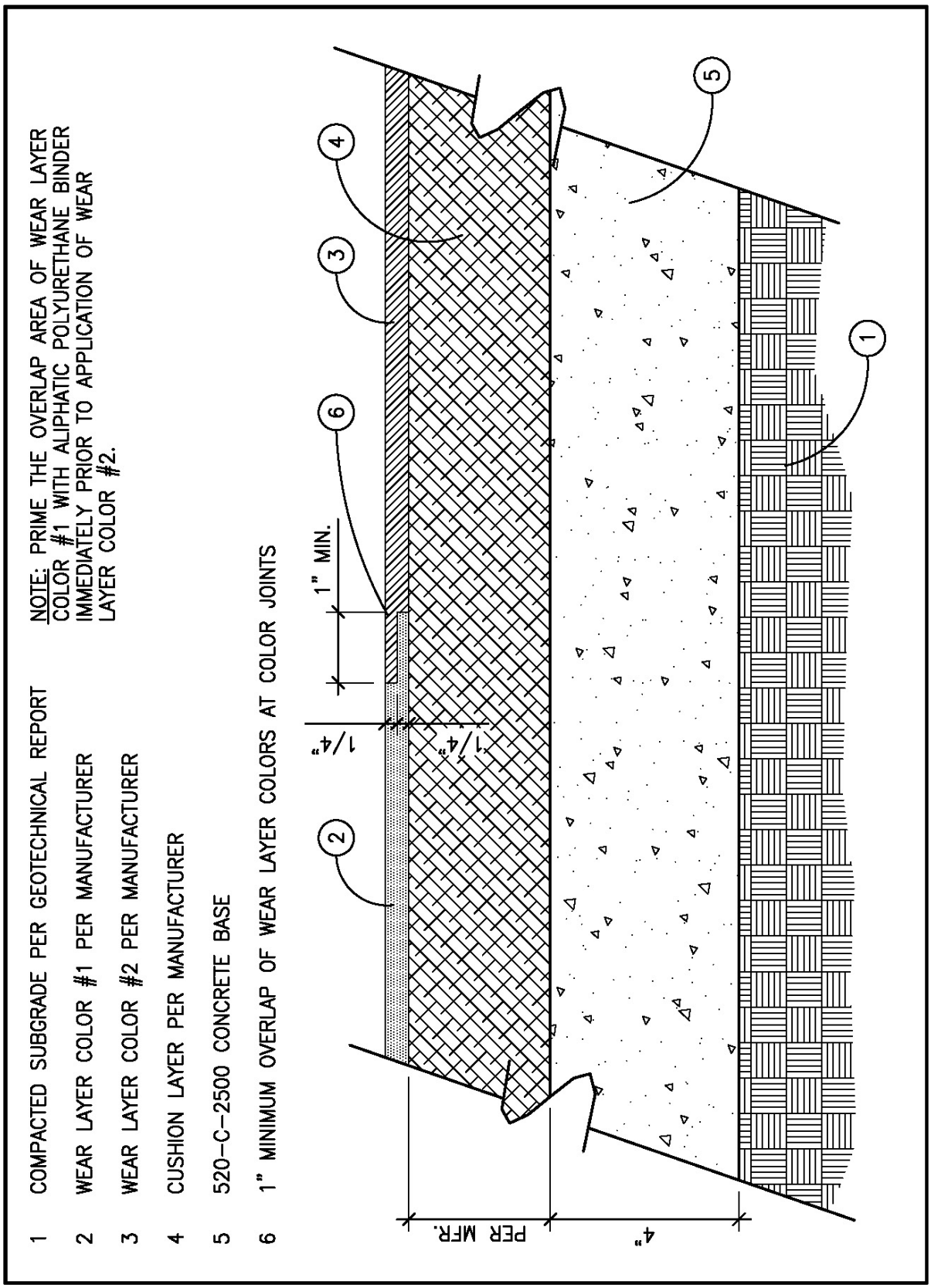

Detail D-3: Tot Lot Safety Surfacing Color Joints - Section View

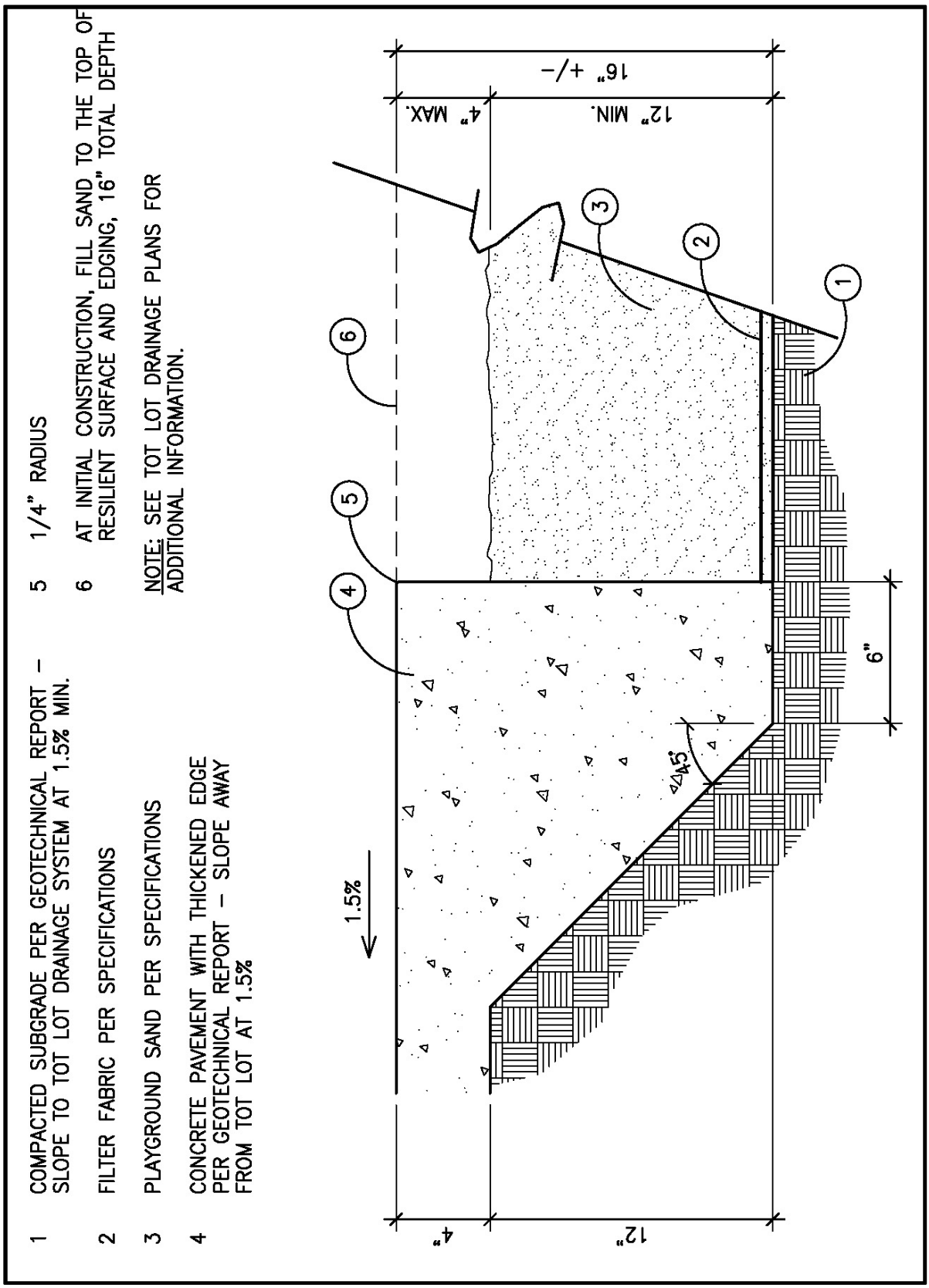

Detail D-4: Tot Lot Edging at Sand - Section View

TRAIL POLICIES AND STANDARDS

OPEN SPACE DIVISION

July 2019

1. INTRODUCTION

These policies and standards are established as a tool for the development and management of the City-wide trail system. It provides guidelines for persons responsible for trail construction and maintenance. Through the establishment of well-defined trail classifications, guidelines and priorities the City-wide trail system will remain consistent no matter if constructed by City personnel or contractors.

This document was developed and designed to meet the needs of the City of San Diego Parks and Preserves. Trail use, alignment and classifications will be consistent with Community Plans, the Parks Master Plans, park specific Natural Resource Management Plans and other guiding documents. Most trails within the City are managed by Parks & Recreation staff within Open Space Division. The trail system provides not only recreational hiking, biking and equestrian opportunities, but also routes for resident commuters. Additionally, designated open space lands, not under direct management of a larger park unit, have trails or paths that provide neighborhood links to the larger open space regional parks.

Trails within City managed lands range from marginally improved "primitive" trails to "improved" trails. Trail improvements and construction are implemented to improve safety, sustainability and provide protection of natural and cultural resources.

2. TRAIL CRITERIA

To effectively manage a trail system, it is beneficial to first designate each trail into a basic group or class. The designation of each trail is determined by using specific criterion established in this policy. Existing trails will be scrutinized to determine if they are to be approved/accepted into official trail status. New trail construction must meet the standards of safety, sustainability and use compatibility.

2.1 TRAIL DEFINITIONS

An approved/official trail must meet one or more of the following Basic Trail definitions:

2.1.1 Destination Trail: A trail designed to go to a specific destination. The destination may be a point of interest for scenic, educational, or activity-based purposes. The trail destination will usually include interpretive signage or other information.

2.1.2 Journey Trail: A trail that provides a route to pass through and enjoy natural areas without having a specific destination other than the trail itself.

2.1.3 Loop Trail: A single trail that provides a loop. This type of trail will usually have scenic or other characteristics but may also be a short exercise trail.

2.1.4 Connector Trail: A trail that connects or links to another trail or trail system. This type of trail could also be part of a larger destination, journey, or loop trail, or may be the start or ending of an alternate transportation route.

Even if a trail comports with one of the above definitions, a trail will not be approved if it is redundant or if it serves only a single private property. For example, a destination trail for which the trail itself is the only destination may be redundant with another trail in the same park complex. Other reasons for not approving/accepting a trail into an approved plan include lack of legal public access, avoidance of environmentally sensitive areas, or other limiting factors.

2.2 TRAIL CONDITION CRITERIA

In addition to needing to meet one of the above definitions, the following Condition Criteria are also required:

2.2.1 Safety: Trail conditions that do-not present undue hazard to users. New trails will be designed and constructed to provide for safe use. Hazards must be identified and resolved using Best Management Practices (BMP) of trail construction.

2.2.2 Sustainability: New trails must be capable of being constructed and maintained in a self-sustaining manner (within reason) under adverse conditions. Existing trails must be improved to the highest level of sustainability using Best Management Practices except as described below. Water management and user management are critical components. Trails improved to the highest level of sustainability are also safe trails.

2.2.3 Non-compliant Trails: One assumption is that yet-to-be constructed, planned trails can and will be built in a safe and sustainable manner. A second assumption is that a number of existing trails require improvements (re-engineered, reconstructed or realigned) in order to become sustainable. Finally, some existing trails are not sustainable and cannot be re-engineered, reconstructed or realigned because of access or landform limitations. In this case some trails will be closed, and some will be given extraordinary efforts towards retrofitting for improved but not total sustainability, as long as they are safe. Trails will be chosen for this extraordinary level of effort only if the trail meets multiple Basic Trail Definitions and is highly used by the public.

2.3 TRAIL CLASSIFICATIONS

2.3.1 Primitive Trails: These trails will vary in width, with a minimum trail base width of 48 inches. Actual used trail width may be less than this base. Minimum base is to accommodate maintenance needs, bi-directional travel, and provide safe passing space. These are trails that see limited use, are usually more difficult, with grades that may exceed trail standards, and are primarily for recreational users. Trails that are not intended for multi-use (i.e. do not accommodate equestrian use), narrower widths 24”-36” may be considered. Trails to accommodate adaptive riders may need to be 36” wide.

2.3.2 Moderate Use Trails: These trails will have a minimum trail base width of 60 inches. These trails may be multi-use, are destination-, journey, loop, or connector trails. These trails are usually less difficult with moderate grades (some exceeding trail standards), and usually will see multiple direction travel. Trail engineering and tread improvements may include surface amendments or structures for resource protection and visitor safety. Trails that are not intended for multi-use (i.e. do not accommodate equestrian use), narrower widths 24"-36" may be considered. Trails to accommodate adaptive riders may need to be 36" wide.

2.3.3 Utility Access Paths, Park Management and High-Use Recreational Trails: These trails are usually existing service roads that provide recreational trail corridors. These are normally destination-oriented, or connector trails. Most of these trails/roads provide access for park management staff (Park Rangers), and emergency response. Additionally, many of these trails/roads were originally constructed for utility access and maintenance (Public Utilities, SDG&E), and are still active for these uses. Width of these trails/roads will be no less than 8 feet and will average 12 to 14 feet. Tread surface is usually graded annually by utility companies, with minor repairs and improvements made by Park staff (as needed). As these trails/roads are usually linear to the orientation of the Park, many local residents use these routes as commutes to and from work. Tread surfaces may be improved with the installation of surface material to reduce erosion and provide trail sustainability.

2.3.4 Circulation Trails: These trails are usually associated with transportation corridors and are often incorporated into new developments. They vary in width from 8 – 14 feet, and normally have improved trail surfacing. Many of these trails that are adjacent to high automobile traffic areas will be separated from traffic flow by fencing or other barriers. Grades on these trails will generally be gentle; however, trails adjacent to roads may exceed normal trail standards and be consistent with maximum allowable road grades.

3. TRAIL CONSTRUCTION STANDARDS

The establishment of trail construction standards ensures the City-wide trail system will remain consistent no matter if constructed by City personnel or contractors.

3.1 GENERAL

The majority of new trails within the City of San Diego are associated with new development. Many housing development projects, as well as commercial developments, have a trail component. While most new developments have an integrated "internal" trail system, consisting of all levels of paths and trails (including sidewalks), they normally include trail connections to existing trails and trail systems. The connection of new trails to existing City trails and trail systems will need to be approved by the Parks and Recreation Department and must be constructed to minimal City standards. These standards will reflect maximum user compatibility, safety, and resource protection. An initial premise in trail design shall be one that facilitates multiple users. During the design process, site-specific characteristics (e.g., grade, site distance) may require a design that precludes certain user groups. Parks and Recreation staff may close trails to certain user groups for safety purposes. Additionally, as these trails will ultimately come under the jurisdiction of the City, it is important that they are constructed to the highest standards to minimize maintenance needs, protect and preserve natural and cultural resources, and provide for safe and enjoyable use.

New trails proposed to be constructed by the City of San Diego are usually associated with improving connections to existing trails and facilities, as well as to other trail systems. These new trails may be built "in house" by City Parks and Recreation staff or contracted out. In all cases, new trails will be constructed to City standards, and will be built to "Barrier Free" or ADA standards wherever possible.

New trails (including realignment) will be aligned to provide a route selection that is both safe and sustainable. Impacts to sensitive habitat should be avoided unless long-term sustainability requires impacting sensitive resources that will ultimately enhance long range resource protection and preservation. Additionally, if points of interest occur near trail alignments, it may be advisable to include these points of interest as trail amenities. Stream crossings, overlooks, and other locations should be considered for inclusion to the proposed trail to prevent unauthorized trail cutting to enjoy these locations. New trail alignments or trail realignments will comply with all local, State (CEQA), and Federal regulations and requirements.

Trails must be consistent with General, Community, and Specific Plans, and meet all regulatory requirements.

3.2 BARRIER FREE TRAIL DESIGN AND ADA RECOMMENDATIONS

The following guidelines apply to new trail construction required to be accessible and to modifications to existing trails required to be accessible. See Accessibility Guidelines for Outdoor Developed Areas.

New trail construction requires that all new trails are built to City Parks and Recreation standards and will be constructed to address issues of accessibility in accordance with local, state and federal law. While the City Trail Standards reflect the minimum construction requirements, specific conditions may be modified by agreement with the City of San Diego Parks and Recreation Department Open Space Division.

Trails to be constructed as part of new developments and connected to other existing trails or destinations will be built to ADA recommendations in accordance with local, state and federal law. All proposed trails associated with new development must be approved by the Parks and Recreation Department's Open Space Division and constructed according to approved plans. New trails that will not meet ADA recommendations will have an ADA component as part of the trail system in accordance with local, state, and federal law (viewing area, rest area, interpretive location). Access to all ADA compliant facilities shall be constructed to City standards.

3.2.1 Linear Slope, direction of travel:

- 5% or less for any distance
- Up to 8.33% for 200' maximum with resting intervals no more than 200' apart
- Up to 10% for 30' maximum with resting intervals every 30'
- Up to 12.5% for 10' maximum with resting intervals every 10'
- No more than 30% of the total trail length may exceed a running slope of 8.33%

3.2.2 Cross Slope:

- 5% maximum

3.2.3 Width:

- Clear tread width: 36" minimum. (Note: It is recognized this width is less than the trail width guideline for new trails that will apply in addition to this minimum called out in the Barrier-free standards).

3.2.4 Passing Space:

- Provided at least every 1000' where trail width is less than 60"

3.2.5 Signs:

- Signs shall be provided indicating the length of the accessible trail segment

3.2.6 Obstacles:

- Two (2") inch high maximum

3.2.7 Vertical Clearance:

- Ten feet minimum for equestrians
- Eight feet minimum for hikers and bicyclists

3.2.8 Surface:

- Surface shall be firm for wheelchair use (compacted Class II road base advised)

3.3 GUIDELINES FOR NEW TRAILS AND MODIFICATIONS TO EXISTING TRAILS

The following guidelines shall apply to newly constructed trails and modifications to existing trails that are not required to be barrier free in accordance with local, state and federal laws.

3.3.1 Linear slope, direction of travel:

- Maximum average grade: 8% - 12.5%
- Maximum grade: 15% for 100 feet
  20% for 50 feet

3.3.2 Cross Slopes:

- Average cross slope: 2% - 5%
- Maximum cross slope at drains: 15% (gradational from average cross slope edges)

3.3.3 Tread Width:

- Primitive/Light use: Minimum constructed tread width of 48 inches. For trails that are not intended for multi-use (i.e. do not accommodate equestrian use), narrower widths 24"-36" may be considered.
- Moderate use: Minimum constructed tread width of 60 inches. For trails that are not intended for multi-use (i.e. do not accommodate equestrian use), narrower widths 24"-36" may be considered.
- High Use and Utility Access/Park Maintenance Paths that also serve as Trails: Minimum constructed tread width of 96 inches
- Trails in MHPA: For trails in core areas or wildlife corridors of the Multi-Habitat Planning Area (MHPA) the maintained trail tread shall not exceed 48 inches in width.

Note: Generally, all trails should be brushed 1 to 2 feet beyond the trail tread. In the MHPA, where paths may not exceed 48 inches in width, brushing shall be limited to the 48-inch trail corridor.

3.3.4 Vertical Clearance:

- Ten feet minimum for equestrians
- Eight feet minimum for hikers and bicyclists

3.3.5 Surface:

- If required/desirable based on site conditions (i.e. soil type, designated and type of use, ability of landform to drain), surface shall be Class II base (no recycled material) or well graded decomposed granite (DG). Minimum depth of six inches, compacted.

3.3.6 Elevation Changes:

- Elevation changes will use climbing turns where possible. If switchbacks are used, running lengths should be as long as possible. Steps shall conform to step calculation standards.

3.4 ACCESS POINTS AND TRAILHEADS

All access to City-owned Open Space will be from City owned land and public facilities or public access easement and will provide access for all public users where appropriate. Trail use designation will reflect access point requirements. While most access points are designated for limited shared use (mountain bikes / hikers), many will need to accommodate equestrians as well. Equestrian staging facilities need to accommodate horse trailers and sufficient area for ride preparation. Access points in many of the urban canyon areas will be from public streets, City parks, and other City owned and managed lands. Access from major Open Space Parklands is from identified staging areas, and recognized trailheads as identified in Park Master Plans and/or Park Natural Resource Management Plans, and Community Plans. As new developments adjoining these Open Space lands are completed, additional trailhead opportunities will be identified.

Access to trail systems in urban canyons, Open Space Regional Parks and developed parklands should be limited to specific points of entry that are safe and sustainable. While many areas have well used access points from the local communities, these should not be excessive. General requirements should limit trailheads to no closer than 0.25 miles. Some communities may have multiple access points within shorter distances to accommodate uses beyond recreational trail use. Connections to local schools, shopping, and alternate transportation may allow for spacing less than 0.25 mile. These closely spaced access points will need to be evaluated for criteria including; safety, sustainability, user volume, demographics, and justification of community needs. In some areas it may not be feasible to provide access at 0.25-mile intervals. Due to steep topography, sensitive habitat, dense vegetation and private property issues, access may exceed several miles. It is the goal of the Parks and Recreation Department to provide the most reasonable, rational, and safe access to trails.

The following items are basic guidelines for access locations. Deviation from these guidelines will require site specific evaluation for rationalization and inclusion as approved trailheads.

- Access from identified trailheads and staging areas in Open Space Parks
- Public access from streets, City parks, and other City owned lands
- Minimum 0.25 mile spacing (site specific)
- Safe / sustainable access (per trail standards)
- Reasonable access to existing trail system
- Specific use (recreation, alternate transportation, other)
- Recognized in Community or Park Master Plans
- New access to accommodate new trails in developing City areas
- Reasonable access for park staff to maintain and patrol as needed
- Appropriate signage

Additionally, efforts should be made to provide the highest level of access, including ADA components, at trailhead locations. As most City trailheads and access points normally drop into steep canyon areas that may not provide ADA opportunities (landform, vegetation, etc.), it is important to try to provide a reasonable trail experience for disabled users. These ADA trail components may be loop trails or scenic overlook opportunities.

4. TRAIL CONSTRUCTION TECHNIQUES AND FEATURES

This section outlines the City of San Diego standards for trail construction and maintenance. By the establishment of standard trail construction and maintenance techniques and features the City-wide trail system will remain consistent no matter if constructed in-house or by outside contractors.

4.1 GENERAL/HISTORY

Existing trails that are currently managed by the City of San Diego were developed utilizing a combination of service roads, easements, game trails, and trails created by casual use (volunteer or social trails). These trails existed at the time of acquisition of those properties (for park and Open Space preservation) and, although many of these trails do not meet current trail standards, they became the core of the City's trail network. Over the last decade, Park Ranger staff, assisted by large numbers of volunteers and multiple funding sources, has, and continues to, successfully justify use of and improve those existing conditions to meet the safe and sustainable goals. The ultimate goal is the implementation of an organized trail system more in keeping with "Best Management Practices" consistent with National Park Service and California Department of Parks and Recreation guidelines. In working toward this goal, the City is striving toward the improvement of these trails during routine maintenance and will work toward "barrier free" trails wherever possible. Many of the existing trail alignments may not be favorable to total accessibility; however, ADA and Barrier Free construction will be implemented as opportunities allow.

Existing trails within both managed and unmanaged City lands vary. Trails may have evolved from game trails or casual use (narrow, single-track), or shared road or utility access (wide, 8 – 14 feet). These trails are usually accepted by the local community, and often as part of the community approved plans, as "the trail system". These trails may be in any condition, from poor to excellent, depending on level of maintenance. Level of maintenance is usually dictated by safety, resource protection, and public need.

Classification of existing trails is determined by the City of San Diego, Parks and Recreation Department's Open Space Division, or sometimes by General or Community Plans, and community input. As use and demographics change in many locations, it is important to

evaluate use designations, and change if necessary. As trails become a larger part of overall transportation within the City, as well as for recreational enjoyment, it is important to provide rational classifications and linkages to other transportation corridors and routes. Trails may provide for important alternate transportation (commuters), or casual interconnection within communities (schools, shopping, parks). As conditions change in many of the Open Space areas, either by increased use or level of connectivity, many trails will need to be modified to a higher level of accessibility. While these trails may become more and more important as alternate transportation, it is important to maintain the integrity of the natural landscape and to preserve and protect sensitive natural and cultural resources.

Trail standards for both new and existing trails may need to be modified for specific locations. Topography, soil types, vegetative cover, and adjacent development may affect design criteria. All trail alignments, or trail reconstruction must be approved by the Parks and Recreation Department's Trail Manager or equivalent.

Several agencies including California State Parks, the National Forest Service and the Bureau of Land Management (BLM) have developed "Trail Standards" that are consistent for their particular agency. However, many of these standards are not always effective in the Southern California region. Some of the major problems associated with specific regional conditions may require more inventive techniques in restoring and maintaining trail tread.

California State Parks has compiled one of the more comprehensive sets of standards and design guidelines in their "California State Parks Trails Handbook". While these standards and design criteria are considered the most applicable to this region, some modifications may be needed in specific locations. Specifics addressed in this section use the California State Parks Trails Handbook as baseline criteria. Soil types, vegetative cover, and precipitation in many areas of San Diego County have considerably different characteristics than other areas within the State.

4.2 ACCESS PATHS AND TRAILS (UTILITY ACCESS AND EASEMENTS)

Throughout Open Space lands within the City of San Diego, there are existing access paths and easements for utility service (Public Utilities Department, SDG&E, etc.). Many of these access paths have been adopted by the community as trails. In many cases these paths provide reasonable trail connections and linkages. As these paths are normally linear and bisect Open Space boundaries, they may provide excellent connections between developed areas of the City.

Whenever possible, and where conditions are favorable, improving these access paths to trail standards may be advised. Grade and out-slope for these paths should remain consistent with trail standards; however, width may need to be modified to accommodate utility service equipment. It may be advisable to improve surfacing to reduce wear patterns and minimize erosion. In most cases, minor modifications to tread design will reduce or eliminate significant erosion concerns.

Many access paths are sited in or near canyon bottoms. These locations must be addressed to eliminate erosion and siltation problems. Substantial siltation could potentially affect both seasonal and year-round water flows. Specific modifications to tread design, tread surfacing, specific erosion controls built into the path, and planting with native vegetation may be implemented to alleviate erosion. Additionally, many of these access paths/trails

may be important for Parks and Recreation, to provide access for Ranger patrols, maintenance, and emergency response. In cases where the need to maintain these trails for Parks and Recreation use is identified, the width should be no less than 8 feet. In cases where Parks and Recreation access is not required, it may be advisable to reduce the trail width through revegetation while still allowing occasional maintenance vehicle access. Decisions as to ultimate use and needs should be consistent with all regulatory requirements, community plans and other guiding documents, and meet the identified needs of all involved agencies and departments. Developing and modifying access paths to a shared-use may allow for the elimination of other trails or impacts to the land.

As many of the access paths located in Open Space areas may cross, or be located near, water courses it may be necessary to construct facilities to provide for long-term maintenance and public use. Improved facilities to be constructed may include bridges, retaining walls, BMPs, drainage and erosion controls, or other appropriate facilities. If these facilities are expected to be used by heavy equipment, appropriate design and engineering standards consistent with trail standards must be implemented. Engineering design standards are current California State Parks approved standards and are consistent to trail design standards. If paths/trails are to be used by multiple use-groups (disabled, equestrian, etc.) specific design criteria is required. Specific data as to construction standards is on file with the Parks and Recreation Department's Open Space Division.

4.3 CONSTRUCTION ROADS TO TRAILS

Roads often need to be constructed in Open Space for maintenance or construction purposes. In many cases these roads are constructed for limited use during the duration of a specific project, and then will be utilized as a trail or as access for patrolling by ranger vehicles.

Roads constructed in Open Space that will ultimately be used as trails need to be built to the same standards as trails. The only modification would be to the degree of out-slope (tilt away from uphill bank). Because of moderate use by medium to heavy equipment, it is often necessary to increase the "angle of out-slope" to compensate for compaction and general wear patterns. This out-slope will eventually settle into a slope more consistent to current trail standards. Careful assessment of soil types is important when designing road out-slope. If soil types are high in certain clays, excessive out-slope may create sliding hazards for heavy equipment. If these soil conditions are present, then a lesser degree of out-slope, or short in-sloping may be recommended. Degree of out-slope must also take into consideration, grade (or pitch) of road, anticipated water loads, and ability of the landform to naturally moderate water flow. Many areas experience rainfall events that are extreme and may not show in normal data recording formats. Exceptional events that drop excessive amounts of rain within a short period of time may not show in standard records, and it becomes important to look for indications of these events. Also, information that can be obtained locally (park staff, local residents, etc.) may be valuable to determine the occurrence of extreme events.

Moderating flows at water crossings (gullies, ephemeral streams, etc.) should also use methods consistent to trail construction standards and practices. Increasing out-slope at approaches and at minor crossing is advised. Armoring these crossings may also be advised. Major crossings or ephemeral streams also may need increased out-sloping. Additionally, the "upstream" portion of this drainage may need erosion controls to moderate water flow impacts. Stacked "rubble" rock walls will moderate water energy, but still allow for flow. These walls should be constructed as shallow "U" shapes with the apex being toward the

downstream side. Smaller crossings may also use this type of control. It may also be advised to install crushed rock as road base to allow drainage.

Climbing turns (resembling switchbacks) used to reduce grades need to be addressed as similar types of turns used in trail construction. At turns where water loads would impact the lower section of road using out-sloping, the profile of the road should be modified to an in-slope on the upper leg as the road approaches the turn. Water loads should then be directed away from the road at the apex of the turn. Selection of where the transition from out-slope to in-slope on the upper leg of the road will depend on site specific conditions. Outfall drains at the turns may need additional erosion controls to prevent erosion.

Roads graded for construction usually will be in excess of trail standards. If material is available, clear soil may be backfilled on the uphill side of the road to reduce width. Normally, time will reduce width with sloughing, and soils carried in water transport during rain periods, and the road will naturally narrow. If there are no constraints, trimming the downhill bank of the road may also be done to reduce width.

4.4 EROSION CONTROL TECHNIQUES

Soils in the San Diego region can be highly susceptible to erosion. Because of the sensitive nature of many areas, the addition of chemical amendments to the trail tread may not be advised. For modifications to existing trails, changes in degree of trail tread sloping, number of changes in sloping due to lack of cover (i.e.: watershed capacity), and drainage outfalls at switchbacks and climbing turns may be required. Additionally, while it is traditionally unadvisable to add organics to the trail tread, the use of cuttings from brush clearing or thinning to rebuild tread can be implemented in some cases.

Erosion controls for all areas should be consistent. This is especially important with trails, roads, and access paths. A basic understanding of what creates the greatest conditions for erosion is important. Two important factors remain consistent: Water Volume + Water Velocity = Erosion. If controls are constructed to break water flows, erosion will be minimized. Changes in slope or direction of travel will reduce velocities. Multiple controls will reduce both velocity and volume.

By looking at the surrounding landforms, one can identify how water moves across the land. If the trail / road / path intersects the normal flows, it is important to design (or re-design) these facilities to allow water to move in a fashion as close to nature as possible. With the exception of established watercourses, gullies, and other definitive water channels, water will normally "sheet flow" across the land. It is important to re-establish this "sheet flow" when designing or re-engineering trails / roads / paths. By designing trails with consistent out-slopes, water will shed off the trail in low volumes and velocities. If the landform itself is intact, the ability to absorb this water is increased.

Many of the trails and roads currently accepted as part of the City trail inventory consist of old scars that run down the fall-line of hills. Many of these sites are severely entrenched, and it may be difficult to direct water flows to sheet. In these and other extreme cases, "short water management" (managing water within short distances) is advised.

In areas where redirection to the sheet-flow concept is not feasible, construction of silt dams, retaining walls, and well-designed drains will moderate water flow is advised. On

trails and roads that have long pitches where water cannot be redirected, a variety of options may be implemented. These include:

- Periodic water diversions and drains. These drains may provide an escape for redirected water or may be designed as silt basins to capture transported material as water slows. These capture basins require maintenance to redistribute captured material and remain effective.

- Multiple cross slope changes. It is possible to change the cross slope of the trail or road, multiple times within short distances (20 – 50 feet). At each change water will slow and some transported material will fall out. Over time, with maintenance, this can re-establish the topographic profile. Multiple changes in direction increase length and reduce grade. Careful selection of trail direction changes may provide opportunities to augment erosion controls. Extreme care should be used to assure that water does not flow down the trail.

- Drain Dips. Drain dips and drain lenses can be constructed in areas where it may be effective to channel and redirect larger water flows. While these are very effective in managing water flow, it is important to reduce volumes and velocities as much as possible prior to drains.

- Swales and Culverts. These should be a "last resort" method of controlling water. Swales capture large volumes of water and channel them to a specific outfall. This increases volume and velocity and may present a serious problem when dealing with unloading captured water. Swales are normally rock lined. This rock will slow water sufficiently to allow transported material to fall out. If swales are not maintained, this material will block the swale and the water will flow to the path of least resistance. Culverts are also problematic for the same reasons, with the additional problem of dealing with excessive water energy generated at the outfall.

- Silt Dams. Constructed of rock, earthen, or straw waddles. In constructing large area silt dams, it is important to configure dam alignment to be effective. In general, dams should be constructed in a downhill "horseshoe" alignment, with the apex of the curve the desired flow pattern. By reconfiguring these dams during construction and maintenance, it is possible to stabilize large surface areas.

- Water Bars and Rock Water Bars. A water bar is a physical structure across the trail that turns and directs water to the downhill side of the trail. Water bars are made of wood or rock, with rock being the preferred material due to greater longevity and strength.

Many areas that have been designated as trails may be old scars from previous disturbance. Firebreaks, easement corridors, old grading scars that have expanded over time, and fire damaged areas may present large surface areas that are prone to erosion. If these areas have been accepted as trails it is important to stabilize the entire affected area as soon as feasible. The establishment of a trail within this disturbed corridor should meander as much as possible. In trail sections where there has been considerable erosion, and soil types are sandy or non-binding, the laying-in of alternating layers of vegetation mats (from cuttings), and soil has proven effective. Installation should consist of alternate layers of 4"- 10"

cuttings covered with 12”- 16” soil, and thoroughly packed. Trail cap should be no less than 12” of soil. Properly implemented, this layering will stabilize soil migration and enhance bonding of soils as organic material breaks down. Settling of tread will occur as organics degrade, and periodic rebuilding may be required until tread stabilizes.

In some areas where soil migration (primarily sand) is a problem, native soils high in clay content may be added. The addition of inexpensive cat litter to sandy conditions has also been successful in stabilizing soil migration. Areas of high erosion may also require more aggressive trail out-sloping, or multiple changes in trail slope within short distances.

In-sloping and out-sloping of trails in areas susceptible to high erosion may have to be more aggressive to sheet water off the trail surface quickly. Additionally, in areas where consistent sloping is not possible, multiple changes in slope within shorter distances may be necessary to move water off the trail tread (rolling slope). Special care should be taken to assure water outfalls (drains) are well armored and disperse water quickly. Focused water at drainage outfalls will cause rapid erosion.

Natural and manufactured polymer binders, soil cement, and clay amendments have been successfully implemented to stabilize and harden trail surfaces.

The use of water bars is not advised in areas where serious erosion is a problem (both trail and surrounding area). Water bars tend to clog rapidly or be affected by serious down-cutting at the outfall. Construction of “drain dips” at water-bar locations is an effective control to break and disperse water flow. If water bars are to be used until the trail surface can be properly engineered, multiple, closely spaced bars may be needed to control flow. These water-bars should be used as a temporary measure only.

4.5 TRAIL TREAD SURFACE MATERIAL

Trail tread surfacing can range from unimproved natural soils to hardened / stabilized material. It is important to remember that the trail is to be an integral part of the natural landform and should not substantially change natural landform characteristics. The ability of the trail tread to allow some water percolation into the watershed is also important.

Trail surface material may be needed for high use, improved accessibility (ADA), specific user groups (bikes, equestrians, etc.), or to reduce or eliminate erosion. Various grades of DG (decomposed granite) are often used; however, a Class II, or Type II road base is preferable (no recycled material). DG may be used if it is well graded and the color is consistent with surrounding landforms. These materials are made of graded material, from very fine to coarse, and tend to lock and bind better than single grade aggregate materials. If Class II road base or DG is properly compacted the tread will remain sustainable even at grades exceeding trail standards (providing all other trail criteria are consistent to standards). With proper out-sloping, in-sloping, and slope reversals (rolling grade), a compacted Class II base trail tread will remain sustainable under high use and moderate to heavy rain events.

Often, trails may see very high-use by multiple user groups. Circulation trails and some high-use Recreation trails may need a soil stabilizer to bind the tread surfacing. Soil stabilizers can include natural or chemical polymer binders, soil cement (Green Book), clay, lime or salts. Some of these stabilizing treatments may not be compatible with sensitive

natural resources, therefore, careful analysis of an additive must be assessed before installation.

4.6 TRAIL GRADES

Range of trail grades are affected by trail type, projected use, soil types, and general landform characteristics. Generally, some amount of grade should be considered for all trails to reduce erosion by enhancing water movement and management. See Guidelines for new trails and modifications to existing trails section for grade guidelines.

Classification of trail type and expected user group may allow some latitude in determining grade. While bikers (and some hikers) may find grades exceeding 12.5% difficult, some equestrians find grades up to and beyond 25% as acceptable. Additionally, classification of trails (primitive or improved), and designated user group (equestrian, difficult hike, technical bike) may be critical factors on determining grade.

New trails in the City of San Diego should be aligned at the recommended grade range of 2% - 12.5%. Any grades exceeding 12.5% must be approved by City staff trained in trail design and engineering to assure safe and sustainable alignment. While long-term sustainability is crucial, visitor safety must be maintained.

4.7 SWITCHBACKS AND CLIMBING TURNS

While switchbacks are not advisable when designing a trail with rapid changes in elevation, many existing trails do utilize this design. Because it is often impossible to redesign these trail sections, special care must be taken to manage these turns. If possible, redesign of turns, to more geographically friendly climbing turns, is preferable.

Careful assessment of switchback alignment is important in this region. Because of heavy rainfall events and the potential for serious erosion, water management on the trail tread is critical. Changes from out-slope to in-slope when approaching turns must be assessed to determine proper location. The transition zone (from out to in) will often act as a water bar when water flow is heavy. Care in selecting a location where water drains from this point must take into consideration the ability of the surrounding landforms to handle substantial water flows. Selecting areas with heavy vegetative cover or rocky, broken surfaces (to break water energy) will help minimize erosion at these points.

Outfalls, or drains at the apex of turns must be critically assessed. Often, these turns will dump water to the segment of trail below. This may mean that the in-sloped leg of trail in this section must be shortened to minimize water loads. Additionally, drainage design must effectively break water energy rapidly and disperse water before the next trail leg. A "Herringbone" design of small water bars may help direct water flow from channeling at the drain. If erosion channeling is already evident, a series of retaining walls may be used to break water flow and drop out transported soil. This will also help to rebuild the erosion channel.

Other problems commonly associated with trails utilizing multiple switchbacks and even climbing turns, are hikers cutting the trail. Due to the sensitive nature of regional vegetation, cover is lost quickly in these sections, and the ability of the landform to moderate water is compromised. In areas affected by serious cross traffic, erosion often becomes a major problem, and may affect the out-slope design. Substantial retaining wall construction

may be needed to not only keep visitors "on-trail" in these areas, but to break water flow. Additional retaining walls may need to be built within these sections to moderate both human use and water flow. Rock construction is preferable, as some water will still pass through structure, but slowing flow enough to drop out transported material. Rubble type walls are effective in the interior of these cuts as well. In extreme cases, where cut-across areas are extensive, other barriers may be necessary (fencing, signage, etc.).

Whenever possible, trail design to deal with moderate to severe elevation changes should use climbing turns instead of switchbacks. In many locations, topography may allow for some realignment of existing switchbacks to climbing turn configurations.

(REMAINDER OF PAGE BLANK)

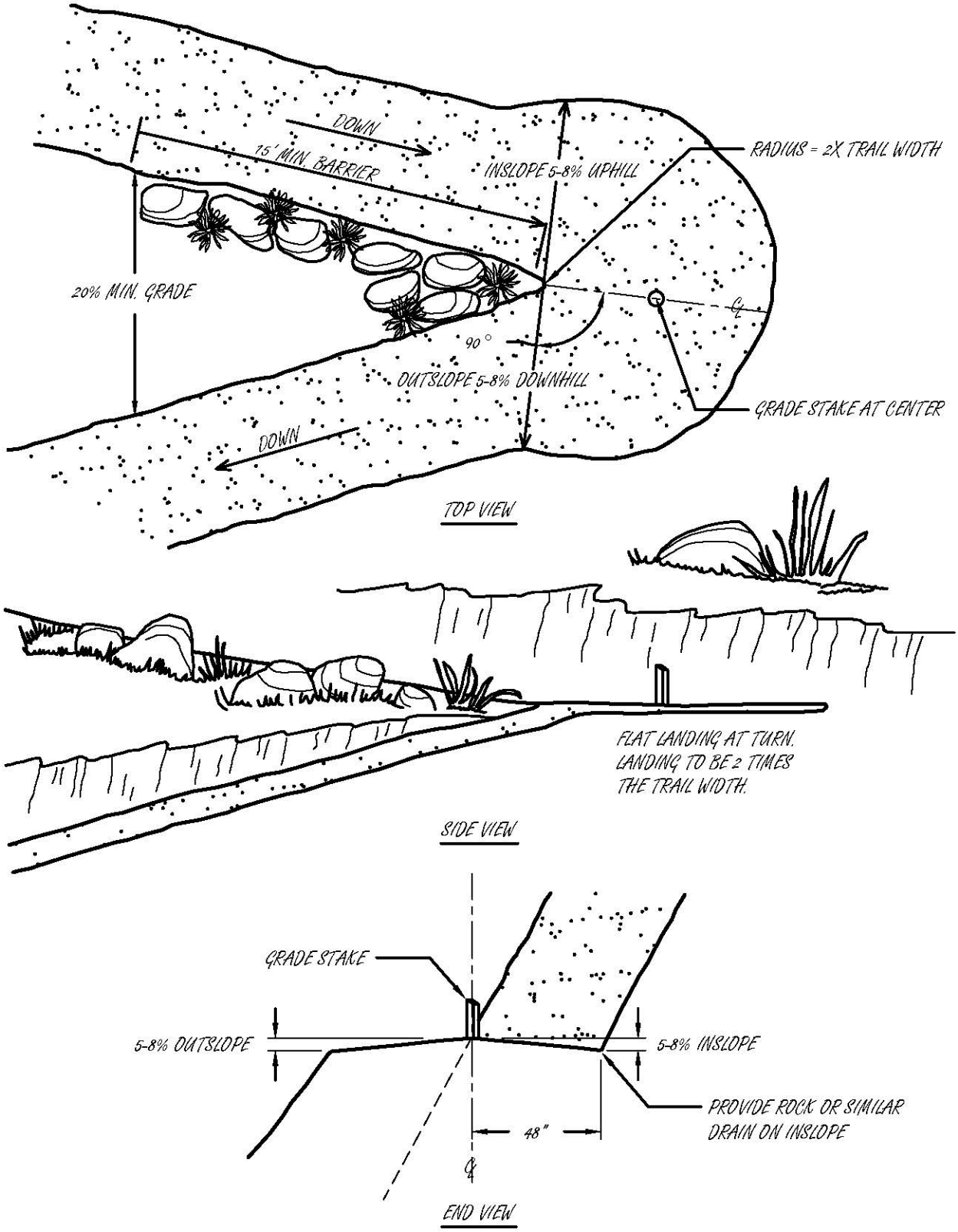

FIGURE 1: TYPICAL SWITCHBACK DETAILS

1-11-2019

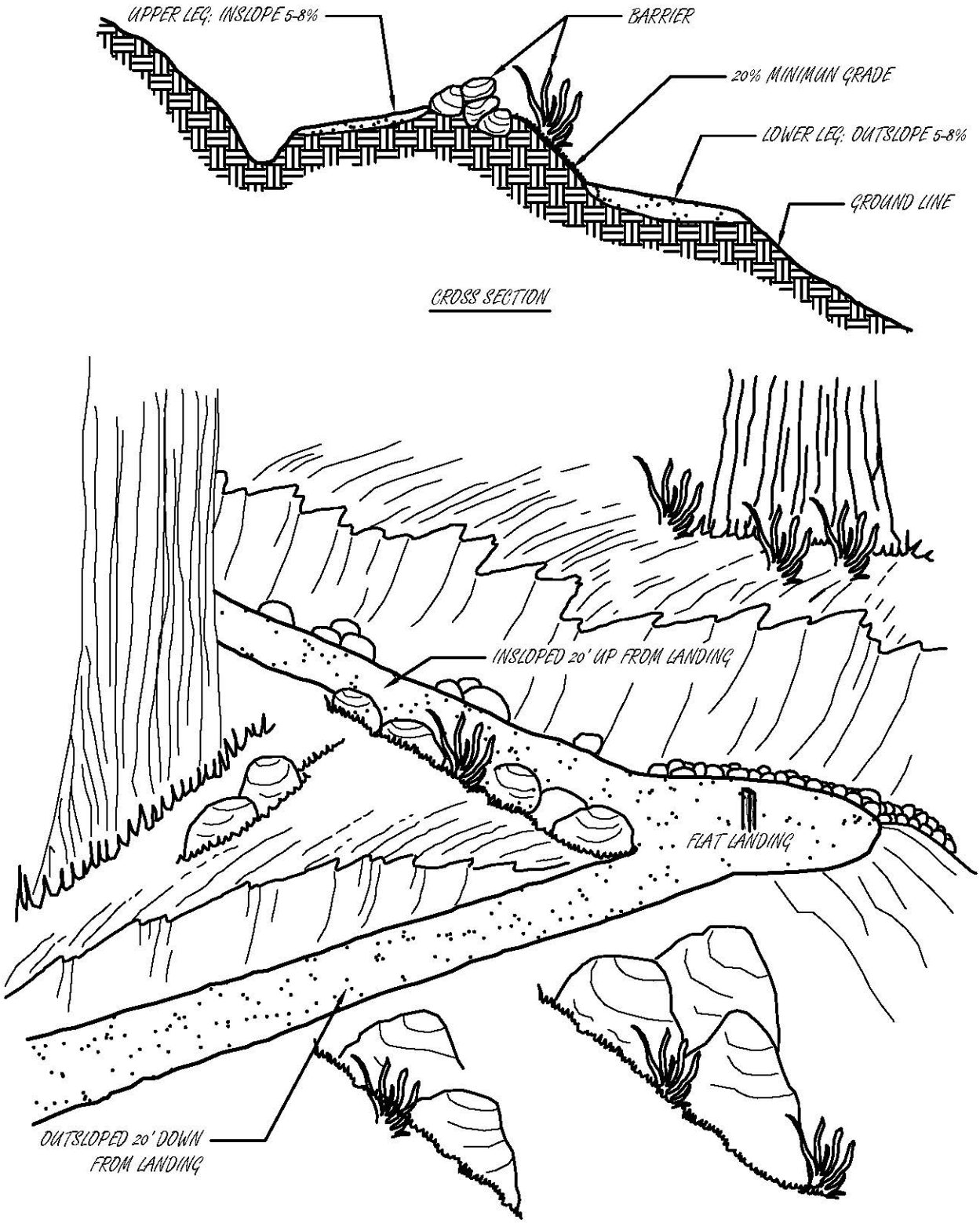

FIGURE 2: TYPICAL SWITCHBACK DETAILS

1-11-2019

4.8 STEPS AND STAIRS

If elevation changes are too steep to construct a trail within grade standards, steps or stairs may need to be considered to make the elevation transition. There are several types of these facilities that can be installed. Step configurations may be full-cribbed, partial-cribbed, cut-out stringer, un-cribbed (free-standing), and cable steps. With the exception of cable steps, all of these structures can be constructed of either wood, rock, or appropriate recycled material. Due to severe erosion many trail alignments have degraded to the point where steps are required for safety, as well as stabilization and protection of natural resources. Steps or stairs may be advised in some new trail construction to prevent degradation of landform, and visitor safety.

Steps must be constructed to engineering standards wherever possible (rise and run). If the site will not accommodate standard construction, step modifications may be acceptable upon inspection. Longer runs, or landings, are typically constructed for trails that may be used by horses, or in areas where long grades exceed advised step, run limits. Changes in design must be approved by the City Parks and Recreation Department Open Space Division staff before installation. The addition of transitional landings within the step carriage may be constructed to accommodate excessive length of runs, and to break change in dissimilar landing designs. The most important factor is to provide uniform rise and run throughout step alignments.

Prior to construction of steps, the site must be surveyed to determine structure configuration. This is done by calculating the rise and run of the site (y vertical feet/x horizontal feet). Rise will be the total elevation gain (vertical distance) to be achieved. Run is the total horizontal distance to make this elevation change. Average acceptable rise standards are 7” – 9”. Acceptable length of runs (or landings) is 13” – 18”. To calculate needs, divide the total vertical rise by 7” or 8”. This will determine the number of rises within the alignment. Subtract 1 from this number for the number of landings. Divide this number into the total length (horizontal distance). These are your runs (landings). If possible, adjust the total run length to conform to run standards.

4.9 BRIDGES & PUNCHEONS

The majority of water flow in the region tends to be ephemeral; however, as the region continues to develop, much of this seasonal flow has changed to “year-round” flow due to increased irrigation and hard surface runoff. Because the type of rainfall experienced in this region often tends towards heavy rain events of short duration, the water flow can be extreme at times.

Site assessment of location for bridges or puncheons must be carefully considered to determine suitability of construction. If locations for this type of construction (puncheons particularly) are being considered, it is important to look at flood event history at the site. Careful assessment of the watershed and the potential for high-energy water flows may make use of structures inadvisable. The construction of Arizona style or ford crossings is preferred in these areas.

If puncheons are to be built, assessment of end member (mud sill) placement is important. Bank integrity, stream channel geography or alignment, or potential for migration of flow during large events, must receive careful consideration. If the site location appears to be fairly stable, and flood, or flow, history indicates the location does not experience much

alteration, puncheons may be constructed. Anchoring one end of the structure may be done to secure the structure in extreme events. This will allow the puncheon some flexibility as it will swing away during high water flow and can be relocated afterward.

Bridge construction in the region requires similar assessment as puncheons, however most bridge locations are normally in relatively stable flow areas. As local geologic conditions vary considerably in the region, assessment of bridge foundation is important. Soil types or integrity of geologic structure for bridge footings may be questionable. In these areas the use of pilings for primary bridge support may be advised. Due to high erosion potential, bridge foundations and approaches may be compromised over time and not provide effective support. There are a variety of bridge configurations and material types that will address specific crossing needs and environmental constraints. Bridge design should be based on the specific needs, geology, topography and character of the setting.

(REMAINDER OF PAGE BLANK)

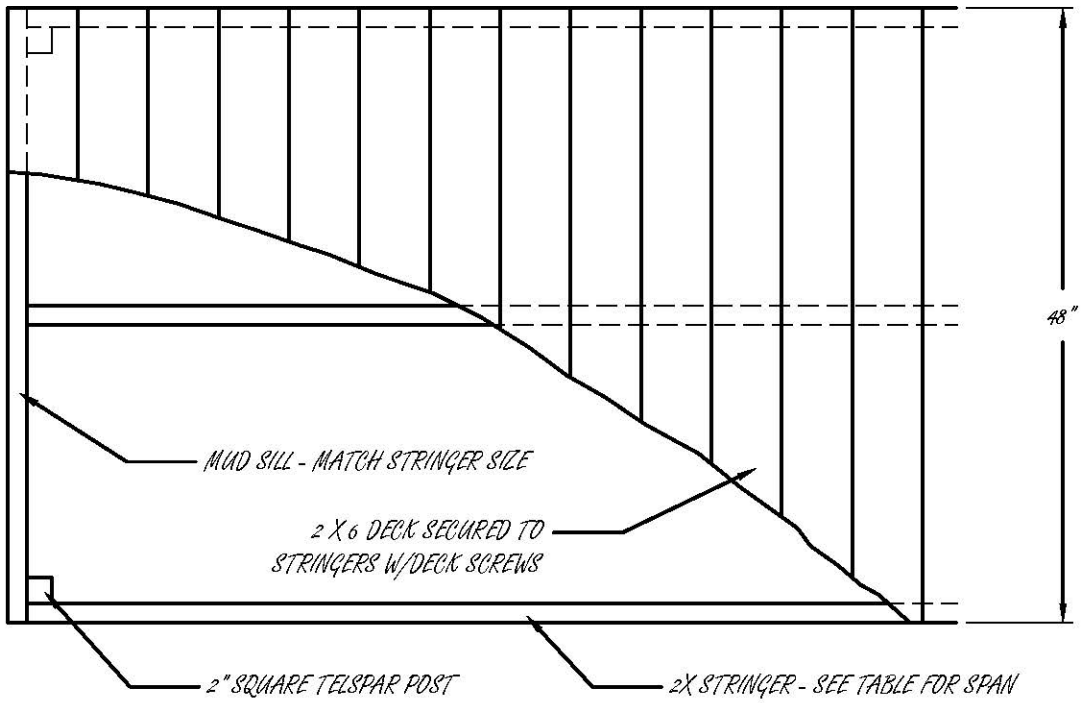

PLAN VIEW

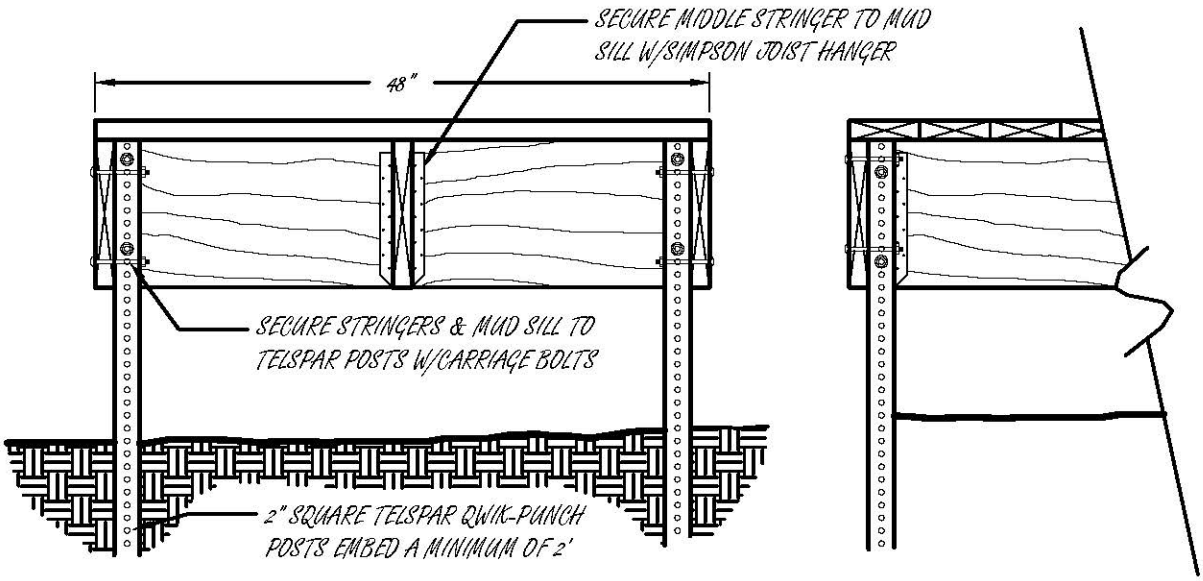

CROSS SECTION

LONGITUDINAL SECTION

STRINGER SIZING TABLE	
SPAN	SIZE
6 FEET	2X6
8 FEET	2X8
10 FEET	2X10

FIGURE 3: TYPICAL PUNCHEON DETAILS

1-11-2019

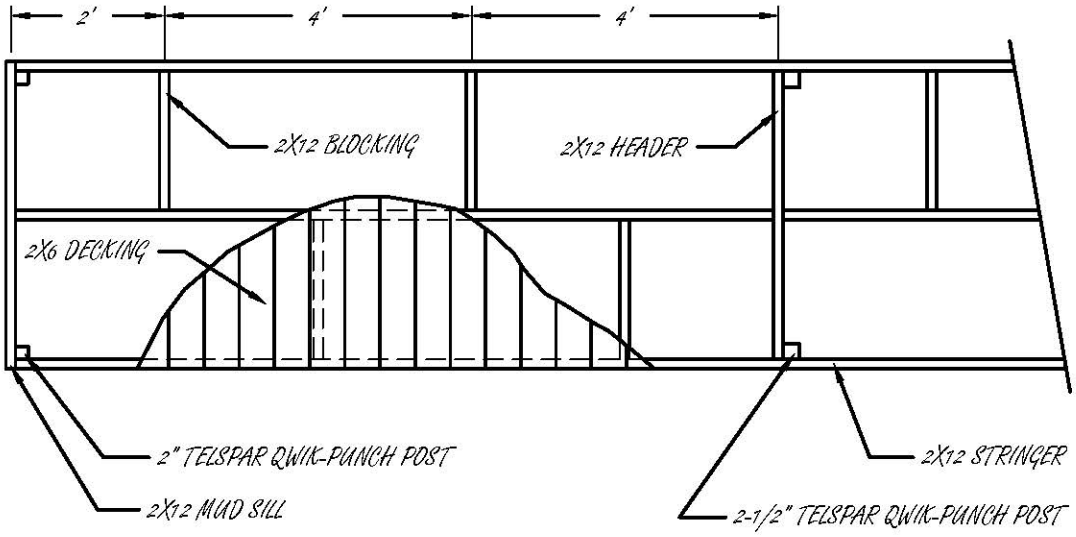

PLAN VIEW

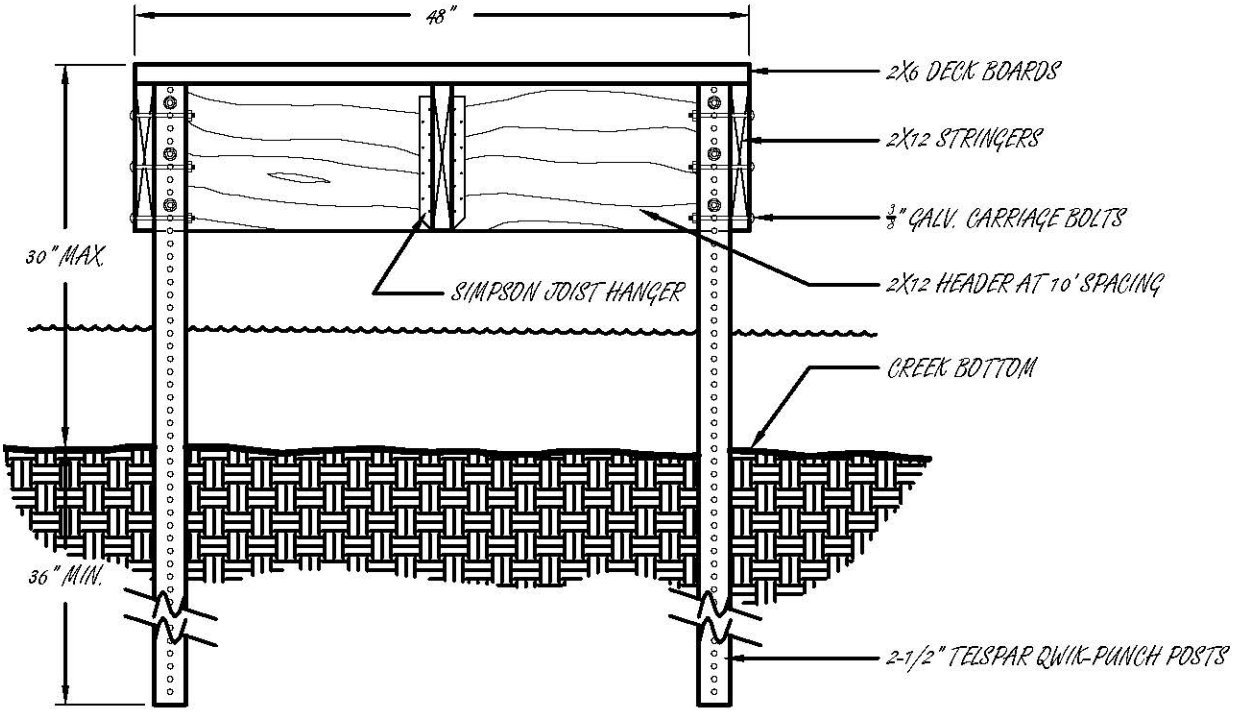

CROSS SECTION

NOTES:

1. USE TELSPAR QWIK-PUNCH POSTS (NOT PRE-PUNCHED POSTS), EMBEDDED 36" MINIMUM.
2. ALL WOOD TO BE 2X12 PRESSURE TREATED DOUGLAS FIR.
3. SECURE MUD SILLS, HEADERS AND STRINGERS TO POSTS W/3/8" GALVANIZED CARRIAGE BOLTS AND WASHERS.
4. SECURE MIDDLE STRINGER TO MUD SILL AND MID-SPAN HEADERS WITH SIMPSON JOIST HANGERS.
5. SECURE DECK BOARDS TO STRINGERS WITH COATED DECK SCREWS.

FIGURE 4: PUNCHEONS EXCEEDING 10 FEET IN LENGTH

1-11-2019

4.10 DRAINAGE

Due to the nature of regional rainfall, trail structure, and soil types, drainage concerns may require more extreme methods to manage water flow and minimize erosion. As previously stated, the arid nature of the region (sparse vegetation), violent rainfall events, and highly erosive soils requires careful "site specific" assessment when constructing drains.

Erosion is the primary cause of trail damage. Water volume + water velocity = water energy (i.e.: erosion). As water moves down the trail and increases in energy, it erodes material from the trail. As more material is added to the moving water, it becomes more effective at cutting resistant materials. The longer and faster the water moves down the trail, the more erosion. By slowing and/or effectively diverting the water, the erosion process can be controlled.

Drainage on trails in this region is best accomplished with well designed "out-sloping" or "in-sloping" (at turns). State Park guidelines advise tread slope from 2% to 10%. This guideline is effective in new trail design, and long-term maintenance level tread surfaces, however higher percent grade may be required in some areas. Trails that have extreme pitches (grades) and suffer from high-energy water flow may require a more aggressive out-sloping to manage water flows. Installation of drain lenses, or large-area drain-dips may allow for reducing out-slope. Some trails may require out-sloping in excess of 15%-18% to stabilize tread and manage water flow. Extreme cross-slopes are normally associated with short-term stabilization and should be modified to recommended standards as soon as feasible. Long pitches of steep grades that are carrying large water loads may still require steep out-sloping. This cross-slope must be designed so that it does not become a safety issue for trail users.

All constructed drains need to be well rocked, unless the landform can withstand water loads. When constructing drainage lenses or drain dips within the run of the trail, the area selected should be of large enough area to disperse water energy effectively. Focused drains, as in water-bars, tend to either clog rapidly, or create erosion problems at the outfall. Depending on pitch (steepness) of trail grade, and length, it may be advisable to add multiple drainage structures throughout the section. By adding drain-dips in a steep section of trail, water energy can be minimized. As the water slows, any material carried in transport drops out. Careful placement of drain-dips can result in adding material to the trail tread as it drops from the slowing water. Regular maintenance of erosion control structures is necessary for the success of the structure.

(REMAINDER OF PAGE BLANK)

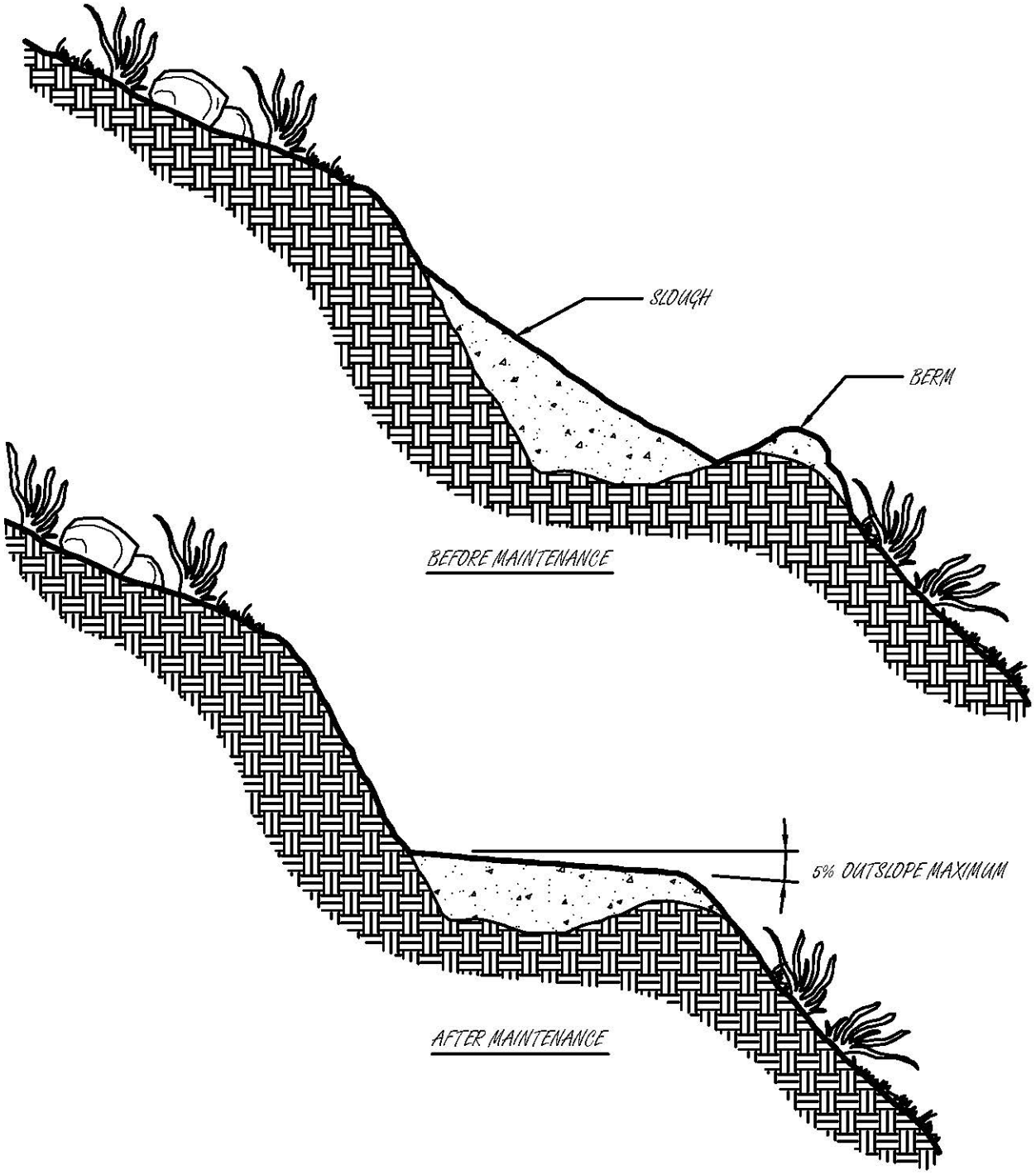

FIGURE 5: SLOUGH AND BERM REMOVAL

1-11-2019

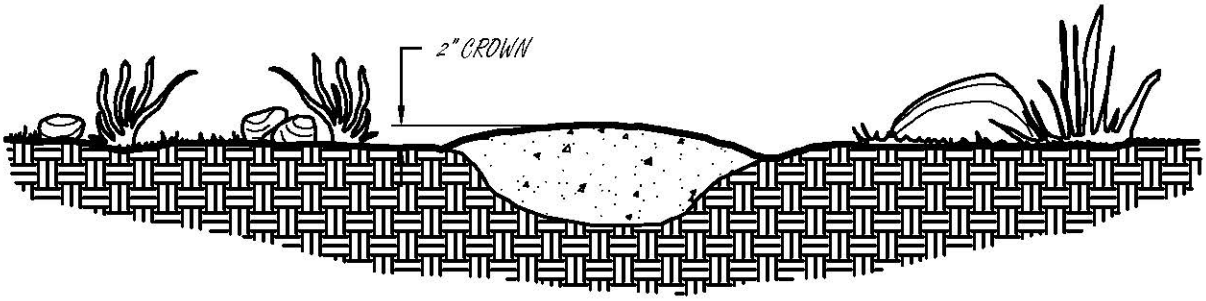

MEADOWS AND FLAT SLOPES

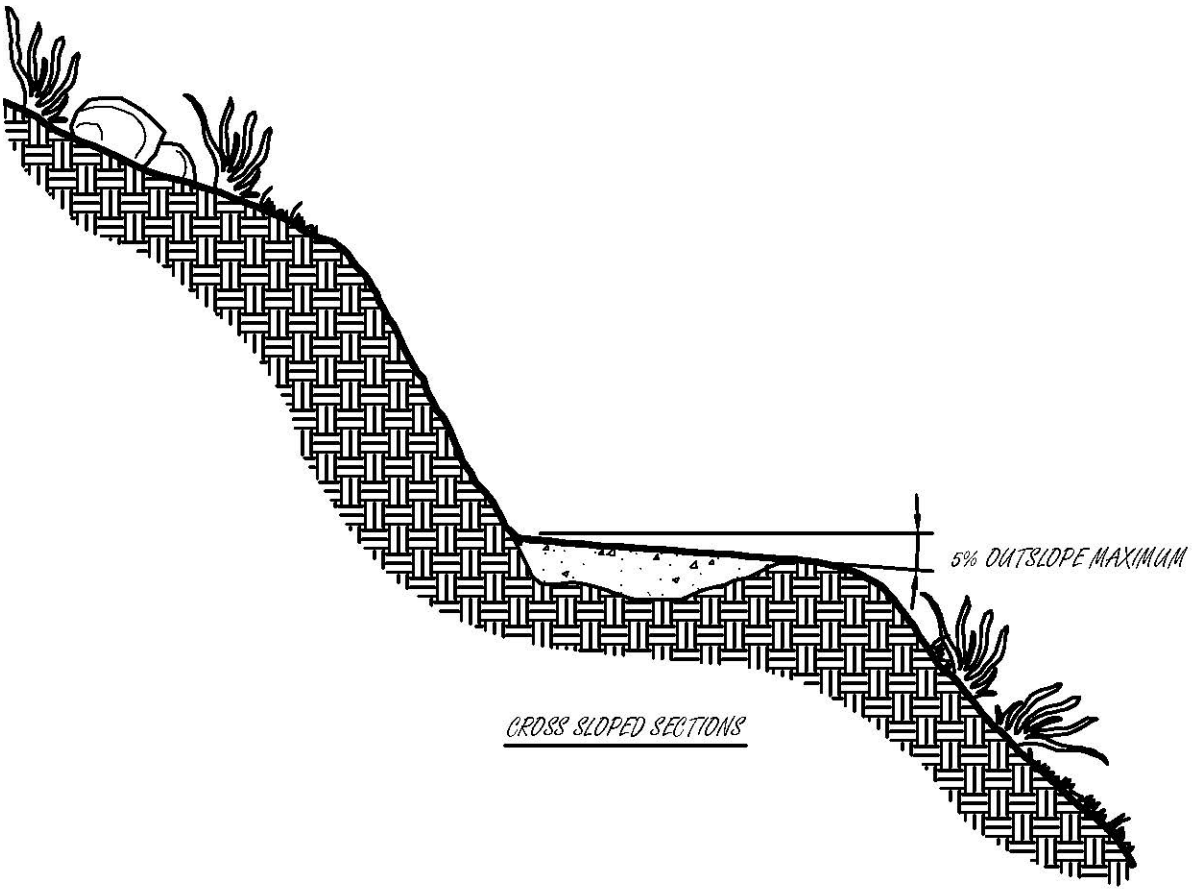

CROSS SLOPED SECTIONS

FIGURE 6: ENTRENCHED TRAILS

1-11-2019

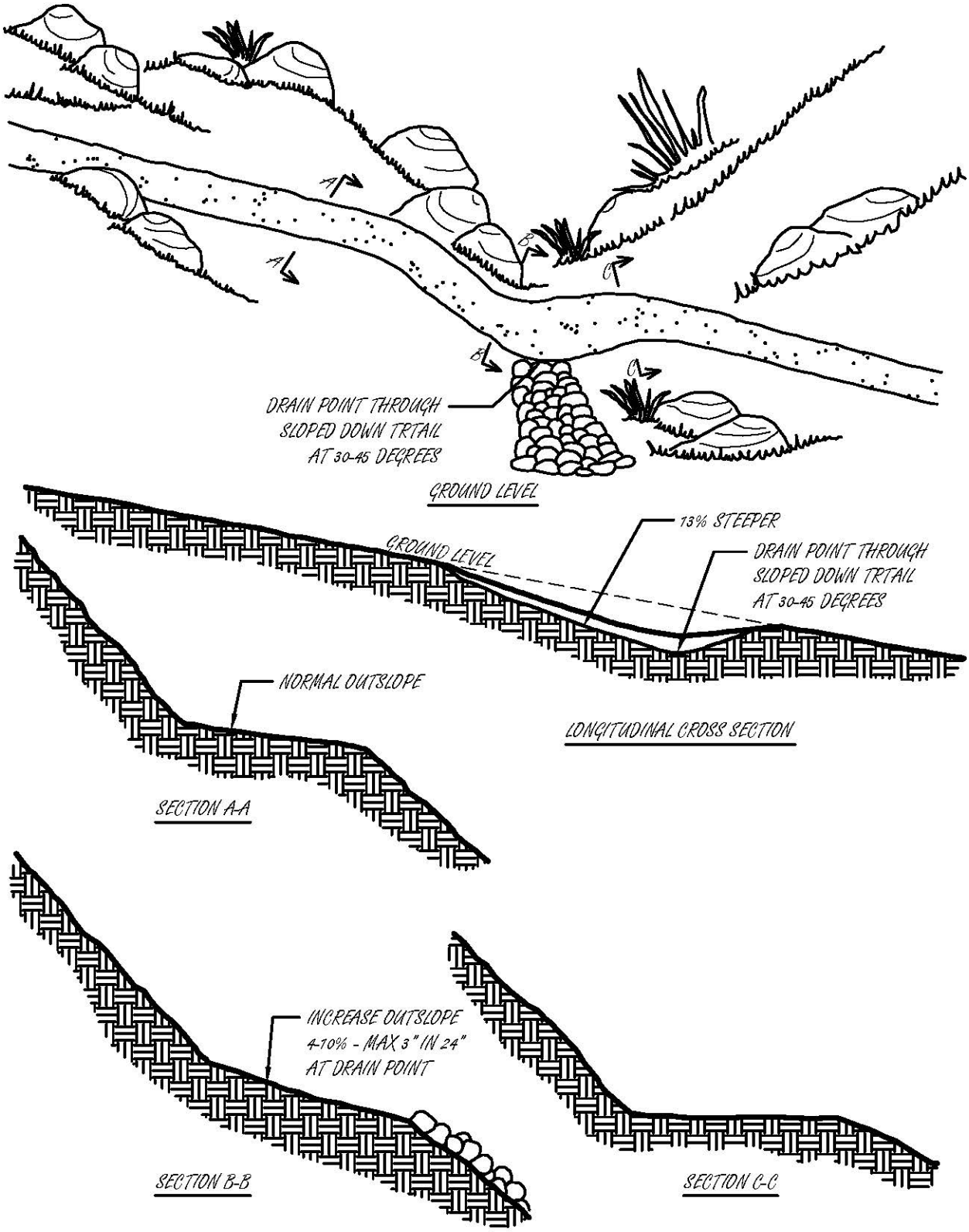

FIGURE 7: DRAIN DIP

1-11-2019

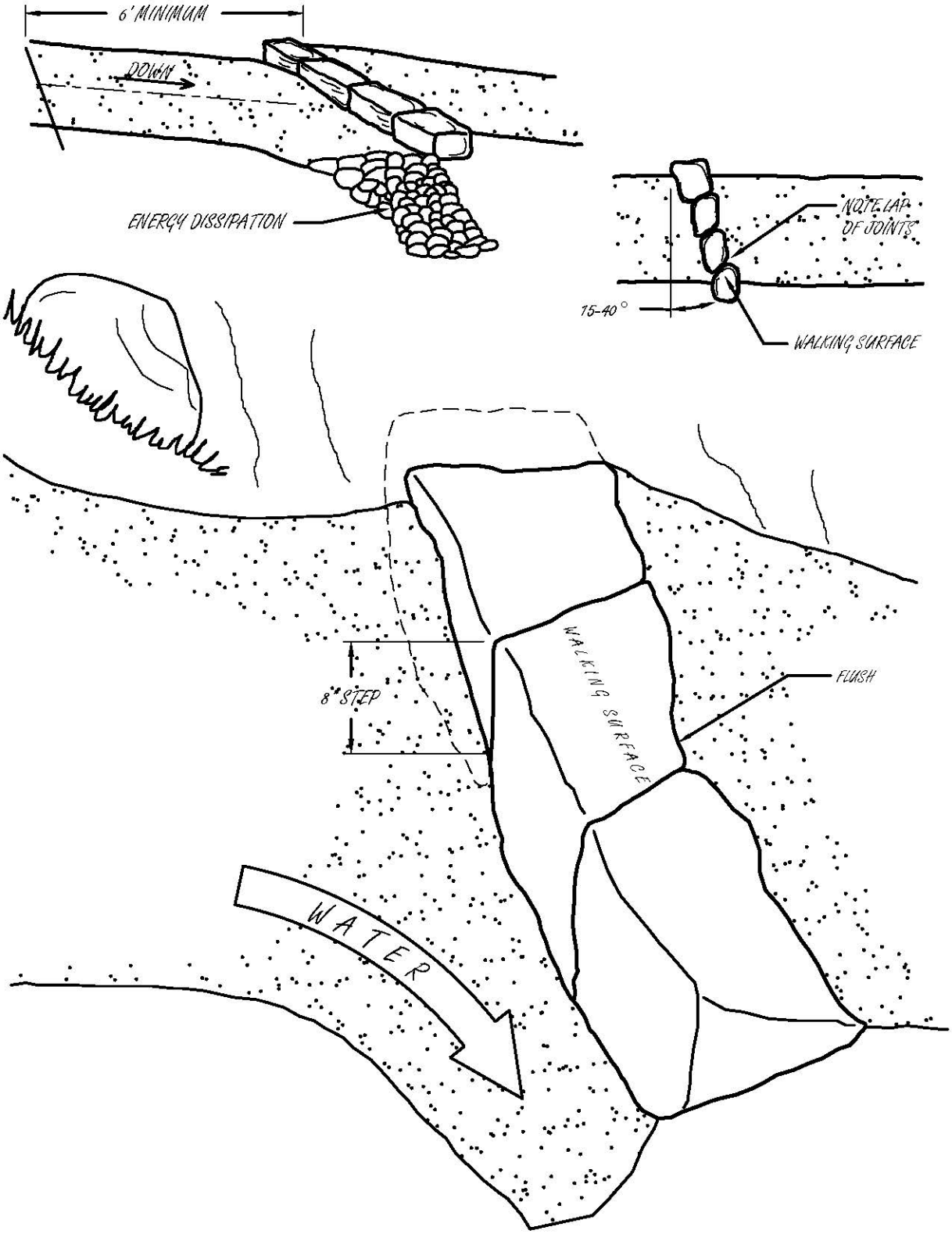

FIGURE 8: ROCK WATERBARS

1-11-2019

4.11 ROCK CONSTRUCTION

Use of rock structures in this region is preferable to wooden or other structure, as it will last forever (if done correctly). Construction of rock steps, rock walls, and rock foundations are not only durable, but also aesthetically attractive. Several types of rock construction are used in this region and may depend on available materials. Stacked rubble walls can be used for erosion control and as retaining walls in relatively flat areas. Fitted rock wall, steps and foundations are done without mortar or cement, and are dependent on careful selection and placement of rocks. Rock walls (both rubble & fitted) need to have the proper amount of layback to function properly. Structural foundations, such as bridge footings, also need proper layback and placement. Rock steps need to be constructed using engineered step calculations, and correct sizing and fitting of rock.

Rubble, or stacked rock walls can be used as erosion controls and as retaining walls for trails or other structures. This type of wall serves well as an erosion control as it will allow some water flow but will control high-energy water flows. By reducing water energy, transported soil material will drop from suspension in water and rebuild areas where soil has been lost. These types of walls are usually out of areas of visitor traffic and may be loosely constructed. Rubble / stacked walls used as retaining walls for trails or other facilities where visitor use is anticipated need to be constructed so they will withstand more severe impacts. This construction needs to be fitted to some degree to allow interlocking of rock. Construction needs to begin with large rocks for base material, grading to smaller material near the top. Small rock and fragments of rock should be used to chink openings between larger rocks and will further lock in the structure. Friable (easily broken) rock works well for chinking. If being built to retain any fill material, the wall needs to have sufficient layback against the weight of this fill.

Fitted rock-walls, foundations, and step carriage components need careful selection and fitting of rock. This type of work can be mortared or cemented in place if needed, however properly constructed rock structures normally do not require this unless there are difficulties in securing structure to bedding. Fitted rockwork needs to meet requirements of secure bedding, good edge contacts, and careful "breaking" of all joints. Sufficient layback of these structures is important, with those structures built on sloping ground needing more pronounced layback. Chinking of gaps is advised with fitted rockwork, as well. This will enhance locking of larger rocks. Secure locking of cap rocks is also important, especially on retaining walls where visitors may dislodge them.

Rock steps require careful selection and fitting also. Rocks used for step construction need to be of sufficient size (> 80 lbs.) so they cannot be dislodged from set locations. It is also important to lock all edges so steps remain secure. Proper engineering of the step carriage is important. Wherever possible, step carriages should conform to engineered standards (rise & run). Some step carriage locations may not fit within standard calculations. If it is necessary to construct steps that cannot conform, it is important that all steps within run are uniform in both rise and run.

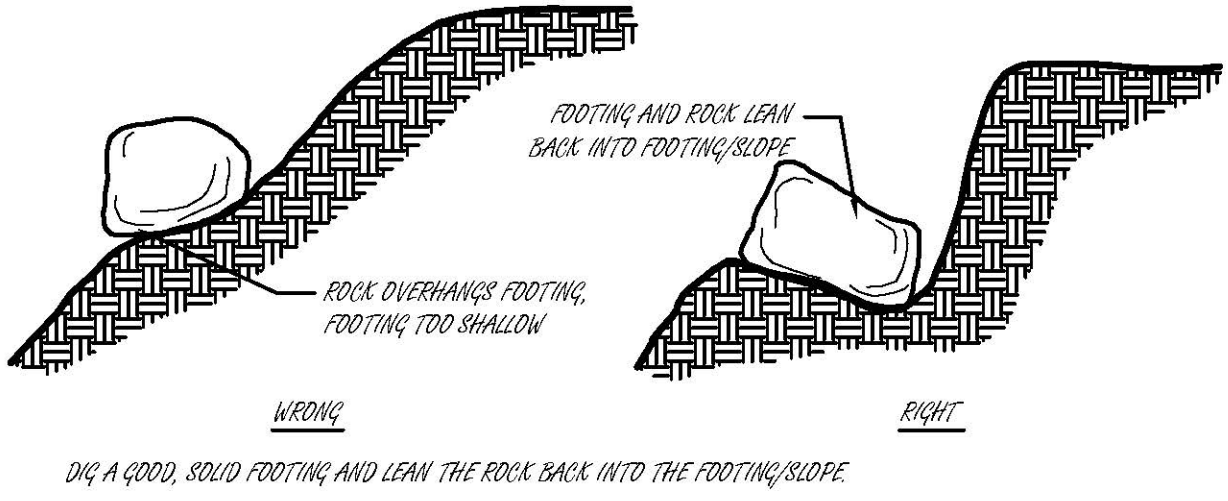

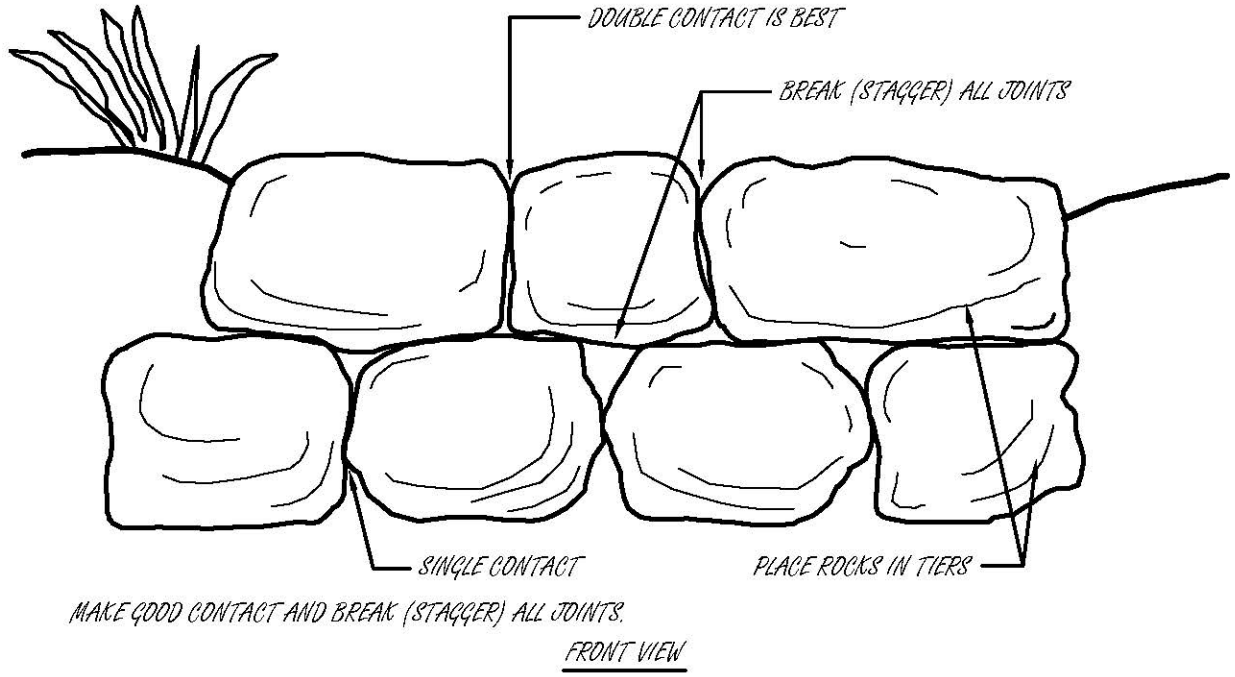

FIGURE 9: DRYWALL FUNDAMENTALS

1-11-2019

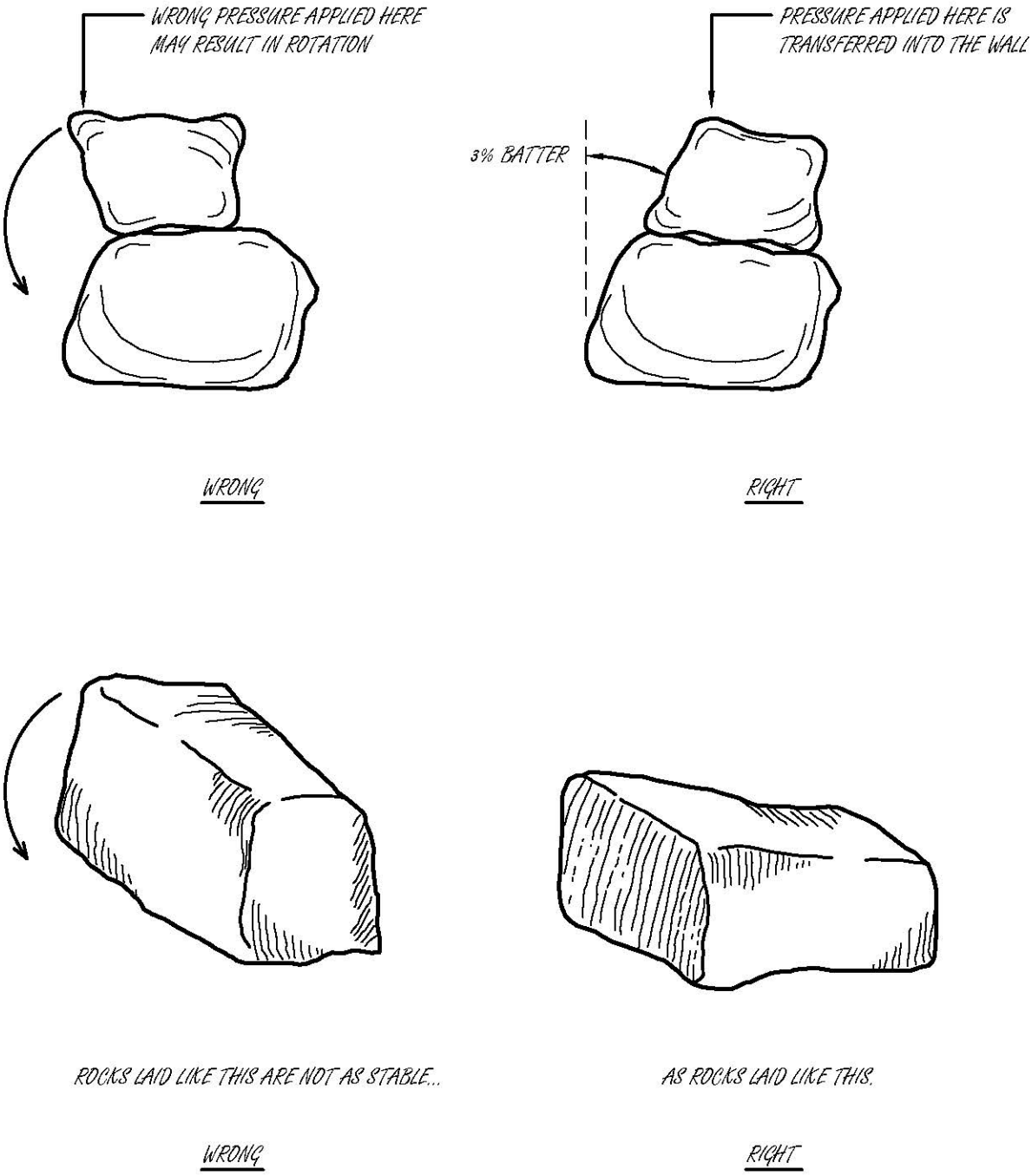

FIGURE 10: LAYING ROCK

1-11-2019

4.12 RETAINING WALLS

Retaining walls may be constructed for various reasons. Stabilization of slopes for resource protection and visitor safety, bridge and other structural foundations, and erosion control and capture of sediment may require retaining wall structures. Landform compatibility must be assessed prior to construction to determine suitability.

Retaining walls may be constructed of rock (fitted and stacked), manufactured block, lumber, or recycled construction material (Trex, etc.). The purpose of the retaining wall will dictate engineering standards for construction. Smaller walls built for minor erosion controls, trail edge stabilization, minor bridge and puncheon structures, and some of the less significant slope failures may not require extensive engineering; however, major structures may require construction to more severe engineering standards. Walls three feet and shorter as measured from the top of the footing to the top of the wall may be constructed without permits. Walls greater that three feet in height or supporting a surcharge will require a permit through the Development Services Department.

Correct degree of lay-back when constructing retaining wall is important. Additionally, construction of interlocking components of wall structure will increase load and holding capacity. Design plans for these structures are on file and available as needed.

In some cases, where retaining walls are to be constructed as a condition of other major facility construction, specific engineering standards may apply. As many walls may require substantial alteration of existing landforms, it is important to have a thorough understanding of constructions, and adherence to any regulatory guidelines or restrictions.

4.13 BRUSHING (TRIMMING)

Brushing, or trimming, is the most frequent maintenance task for most trails. Clearly defined trail corridors are crucial to safety and may be critical to maintaining tread design and function. Trails not sufficiently brushed decrease line-of-sight, which increases potential user conflicts. Additionally, trails that become heavily brushed-in may cause users to “go around” vegetation and degrade the trail by creating a new, erodible, trail tread.

In this region brushing should be done annually in areas where vegetation grows rapidly (chaparral, mixed chaparral, etc.). During yearly cycles with extensive rains, this brushing schedule may need to be increased. High use trails and shared or multi-use trails need to be assessed regularly to maintain safe trail corridors.

Trail brushing may be variable depending on trail classification and use. Generally, all trails should be brushed 1 – 2 feet beyond the trail tread. Overhead brushing should be maintained at a minimum of 6’-8” to 8 feet in height for pedestrian and biking and at a minimum of 10 feet in height for equestrians. If overhead is maintained at less than 8 feet (for example, to maintain canopy cover common in scrub vegetation), the trail must be signed to indicate reduced overhead clearance.

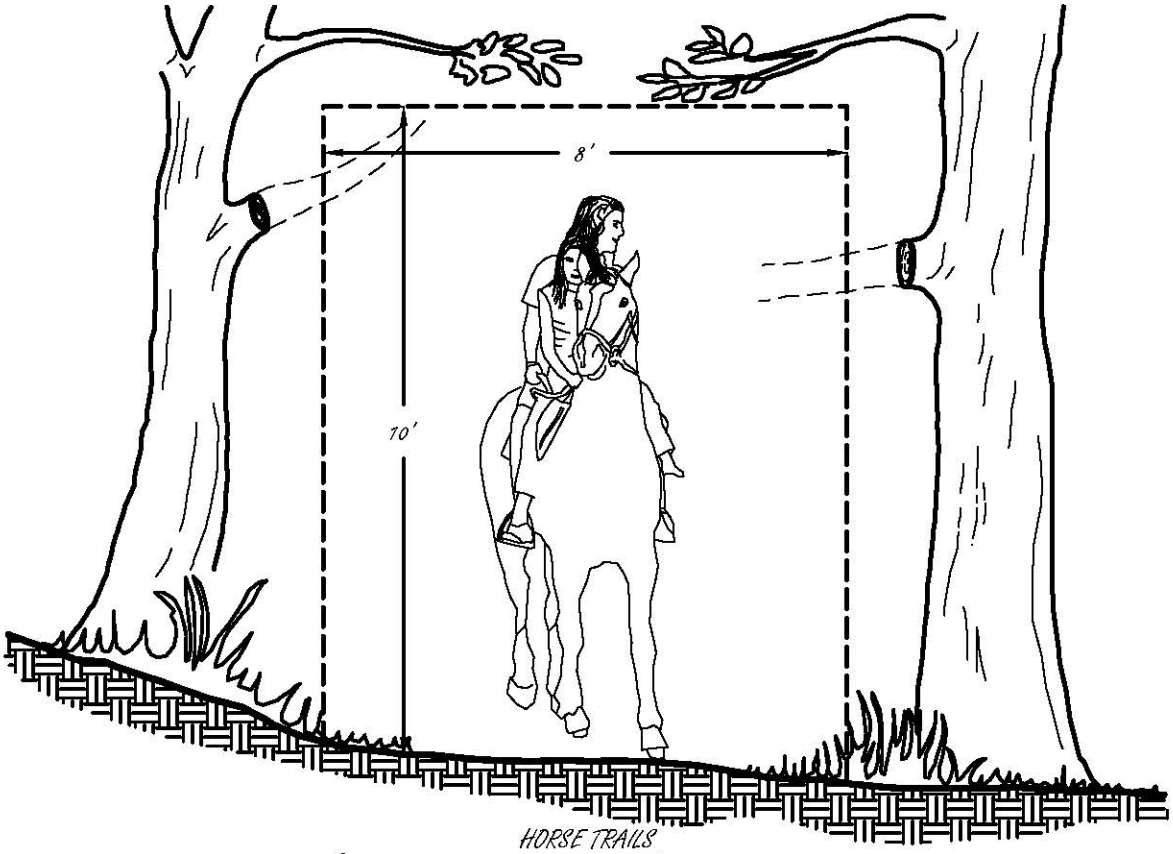

HORSE TRAILS

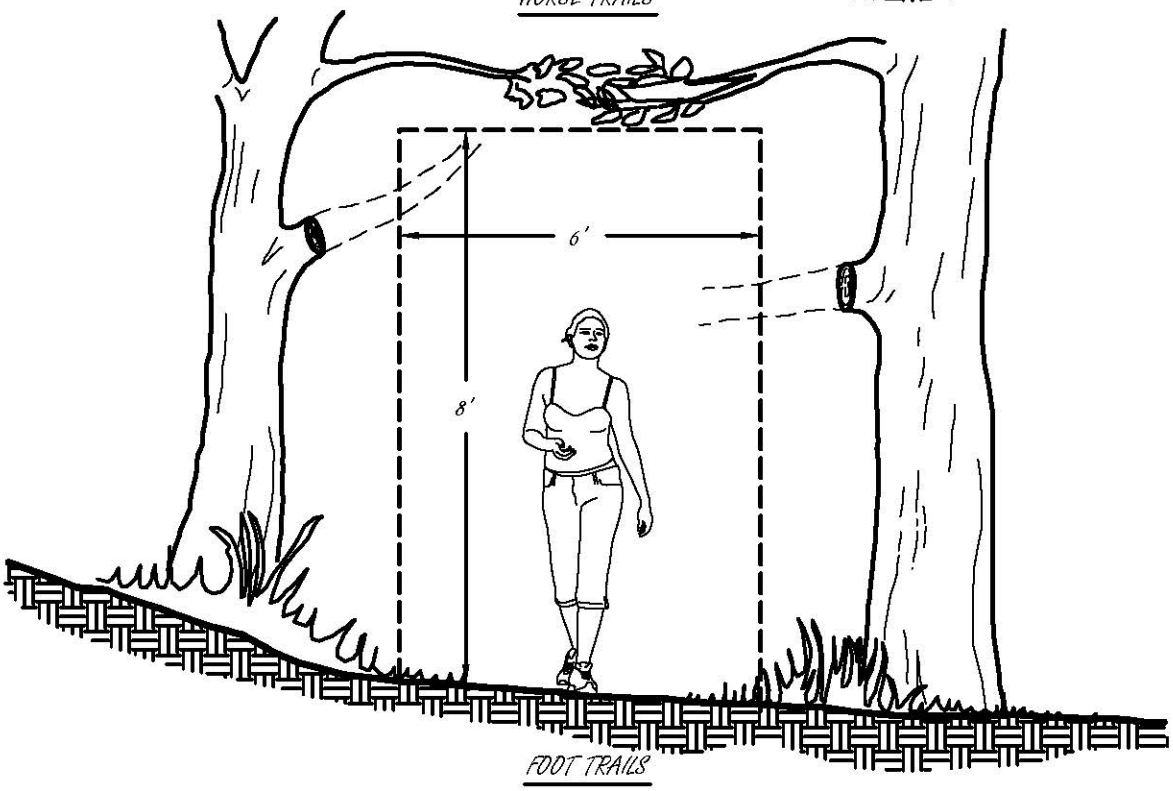

FOOT TRAILS

FIGURE 11: TRAVELED WAY CLEARING

1-11-2019

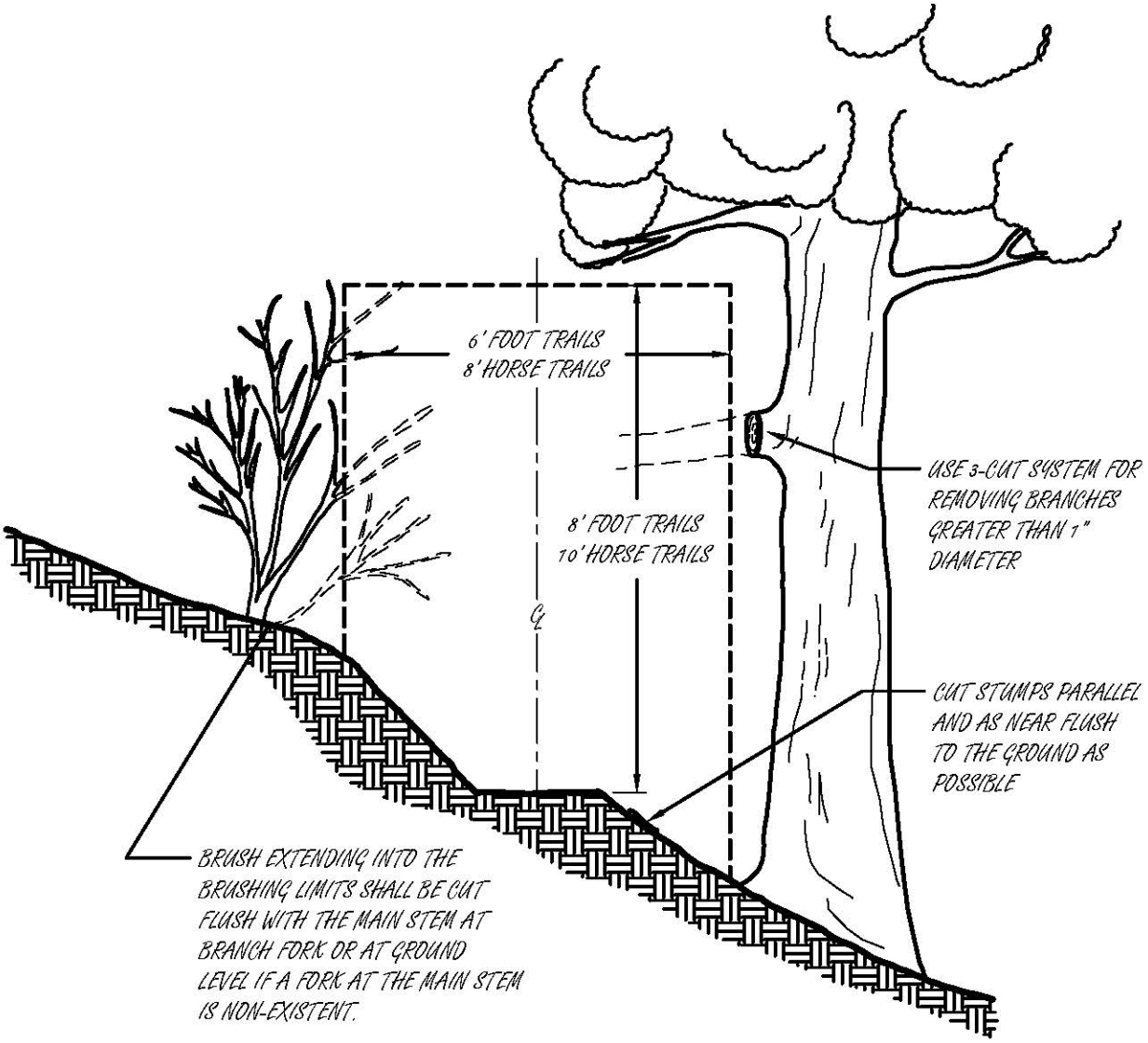

FIGURE 12: BRUSH CUTTING

1-11-2019

In habitat zones with vegetation that typically does not grow to great heights (Coastal Sage Scrub, some Chaparral), brushing to less than 1 foot may be acceptable if brushing above 4 feet can be done to provide good sight lines. This reduced width trimming may be done to retain character of the trail while maintaining existing vegetation for soil retention (roots), and rainfall moderator (to reduce heavy rainfall directly on the trail tread). An understanding of local conditions, including soils and vegetation, will determine brushing requirements in these areas.

Brush removal is usually fairly simple – "find the source". This means to cut brush at the point where the overgrown vegetation begins. Some vegetation types may be cut using shears if cutting back to the source will significantly reduce vegetation. Hand tools such as hand-loppers, pruning shears, hand saws are normally sufficient for annual brushing; however, chainsaws or other power equipment may be needed in some instances. City policy for chainsaw use will be followed. Additionally, all City staff operating power equipment must have current certification (chainsaw). Nesting bird surveys are required during nesting season prior to any brush removal.

4.14 TRAIL CLOSURES

Trail closures will normally be of two types:

4.14.1 Temporary closure
- Repair, rehabilitation, or realignment
- Biological (nesting / breeding season)
- Safety
- Seasonal (rainfall creating conditions where use would damage resources)

4.14.2 Permanent closure
- Redundant trails
- Unauthorized trails, including trail shortcuts (Note: Unauthorized trails that have not been "officially" approved/opened may be closed as needed without an official action.)
- Trails not accessible to the public
- Trails not safe or sustainable
- Trails facilitating illegal activity
- Trails contributing to resource impacts: erosion, biological, other
- New environmental concerns

Trails will be closed temporarily to complete repairs, construct special trail facilities (steps, stairs, fencing, retaining walls, overlooks, etc.), or complete realignments. Additionally, trail closures may be initialized in some areas to accommodate biological concerns (breeding/nesting), or seasonal conditions (rain, mud). While it is ideal to close the trail completely during trail repair and construction periods, it may not be reasonable or feasible due to daily high-use patterns. Where it is difficult to affect a full trail closure, appropriate signage and other controls must be implemented to reduce hazards to trail users and trail crews. While this is usually not an effective option, and reduces productivity of trail crews, it is often necessary. All temporary trail closures should be scheduled to those times when user volume is low, during breeding/nesting season (if applicable), and when seasonal conditions are not favorable (rains, muddy conditions).

Permanent closures will be implemented on those trails identified as having one or more of the above listed closure conditions. Trails identified will be closed, stabilized, and passively

or actively revegetated. Closures traditionally require signage (minimum), and barriers (cut brush, fencing, etc.). If trails identified for closure are recognized in Park Master Plans, Community Plans, or other guiding documents, alternate routes will be identified and constructed to provide for intended access. Permanent closure of specific trails or specific areas shown on City Council approved documents (Park Master Plans, Community Plans, etc.) will be supported with substantive documentation, and can be approved as a Mayoral action.

The primary goal of Parks and Recreation management in the City of San Diego is to protect and preserve sensitive natural and cultural resources in accord with the Multiple Species Conservation Plan (MSCP). New trails, changes in trail use designations (single-use to multi-use), realignments to accommodate use changes, and other trail modifications that impact these resources will require compliance with all regulatory requirements.

4.15 STREET / ROADWAY CROSSINGS

Street and roadway crossings are common in the urban environment, particularly in the more developed portions of the city. While most crossings can utilize signaled or signed crossings where motor vehicles must stop, some crossings may occur in a mid-block. While the majority of these mid-block crossings primarily accommodate hikers, many may also include bicycles, and/or equestrians.

Mid-block crossing "at grade" should be avoided. Other crossing alternatives, such as bridges or tunnels are preferable if possible. If an "at grade", mid-block crossing is considered, design must be implemented in compliance with the City of San Diego Street Design Manual, City of San Diego Council Policy 200-07, Caltrans Highway Design Manual, and State Traffic Manual.

Visual corridors, traffic speed and volume, and crossing users will factor in the determination of required safety controls. While many crossings are in urbanized, developed areas of the City, and have low traffic speeds and volumes, crossing controls may be minimal (signage). In areas that have high traffic speeds and/or volumes, and multiple users (including equestrians), crossing controls may include signs, flashing lights, and user activated signals. Appropriate City Departments will determine crossing requirements.

4.16 SIGNAGE

Signage should be standardized as much as possible, with design and color consistent with the Open Space environment. Brown background with white lettering is the standard for both regulatory and directional signage. Signs should also be consistent with other agency signage (when possible) to provide for continuity and clarity of information. Current City sign inventory may need to be expanded to address changing conditions (usage, specific trail conditions limiting use, etc.).

4.16.1 Regulatory: Signs informing trail users of rules, regulation, and restrictions and prohibited activities. Regulatory signs also provide for the safety of the user or to add to their enjoyment.

4.16.2 Interpretive: Signs providing interpretive, educational or other trail information to the public.

4.16.3 Directional & Location: Signs that indicate location of user, direction of trails, linkages and connections, and mileage (when appropriate).

THE CITY OF SAN DIEGO

M E M O R A N D U M

DATE: November 1, 2011

TO: City Planning and Engineering and Capital Projects Division Project Managers
Maintenance Assessment District Grounds Maintenance Managers

FROM: Chris Zirkle, Deputy Director, Parks and Recreation Department, Open Space Division

SUBJECT: Policy on Avoiding Use of Non-Native Invasive Plants in Parks and Recreation Department Projects

---

PARKS AND RECREATION DEPARTMENT POLICY

All future Parks and Recreation Department projects, whether upgrades to existing facilities or new construction, should avoid the use of any of the Most Invasive non-native plants species listed in the *Invasive Ornamental Plant Guide* in any landscape, and should avoid the use of any of the Moderately Invasive non-native species in landscapes located on parcels adjacent to open space and/or Multi-Habitat Planning Area (MHPA) lands.

Most Invasive Plants: It is important to avoid the use of the Most Invasive species in **any** landscape because it has been documented that they may become established in open space lands from distant plantings. This is because plant seeds or spores can spread long distances through wind, water, or other carriers to reach open space.

Moderately Invasive Plants: Moderately invasive species should be avoided in landscapes located on parcels adjacent to publicly-owned open space lands or open space easements, or the Multi-Habitat Planning Area (MHPA). The *Invasive Ornamental Plant Guide* identifies habitats in which a plant species from this list may be invasive.

Exceptions: While every attempt should be made to substitute alternative, non-invasive plant species for those invasive species listed, in certain unique situations, such as, but not limited to, historic and/or significant landscapes which are not located adjacent to open space or MHPA lands, it may be appropriate to selectively use plant species identified in the Most Invasive and Moderately Invasive plant lists. In those specific instances, a justification letter approved by the Deputy Director of the appropriate Parks and Recreation Department Division must be written and placed in the project file.

EXPLANATION

We are experiencing an invasion of non-native plants in over 70% of our 24,000+ acres of open space, which crowd out native plants and reduce the quality of habitats. Removing these non-natives once established is an expensive, time-consuming, and often not very successful process. Additionally, it is important that the Parks and Recreation Department lead by example, comply with the City's Multiple Species Conservation Program (MSCP), and be a good steward to the open space lands we manage and the MHPA preserve our parks are often adjacent to.

The City's MSCP Subarea Plan, Section 1.4.3 Land Use Adjacency Guidelines, states that adjacency issues must "be addressed, on a project by project basis, during either the planning (new development) or management (new and existing development) stages to minimize impacts and maintain the function of the MHPA…..No invasive non-native plant species shall be introduced into areas adjacent to the MHPA."

Recently, the San Diego Chapters of the California Native Plant Society and the American Society of Landscape Architects worked together to develop the attached *Invasive Ornamental Plant Guide*. The guide is a good resource for explaining characteristics of invasive plants and how they impact native plants, and provides a matrix list of Most Invasive and Moderately Invasive plant species that should be used either not at all, or, only in certain locations. We have included the matrix list as an attachment; however, we encourage staff to explore the website to learn more about invasive plant species and about the *Invasive Ornamental Plant Guide* (http://www.asla-sandiego.org/Download/PG_08_mod.pdf). We have also ordered copies of the California Invasive Plant Council *Don't Plant a Pest* brochures for distribution to interested staff and the public. This brochure is a good visual and informative guide to what native or non-invasive plants can be used to replace species on the *Invasive Ornamental Plant Guide* matrix list. The brochure can also be accessed on the internet at the following web site http://www.cal-ipc.org/landscaping/dpp/planttypes.php?region=socal.

If you have general policy questions, feel free to contact Chris at 619-685-1323. For more specific or technical questions, contact the following Open Space staff: Josh Garcia, Natural Resources Manager, at 619-685-1308; or Paul Kilburg, Open Space Lands Coordinator, at 619-685-1327.

(signature on file)
Chris Zirkle

NOTE: PLEASE FOLLOW THE LINKS PROVIDED ABOVE FOR MOST CURRENT VERSIONS OF THE REFERENCED ATTACHMENTS.

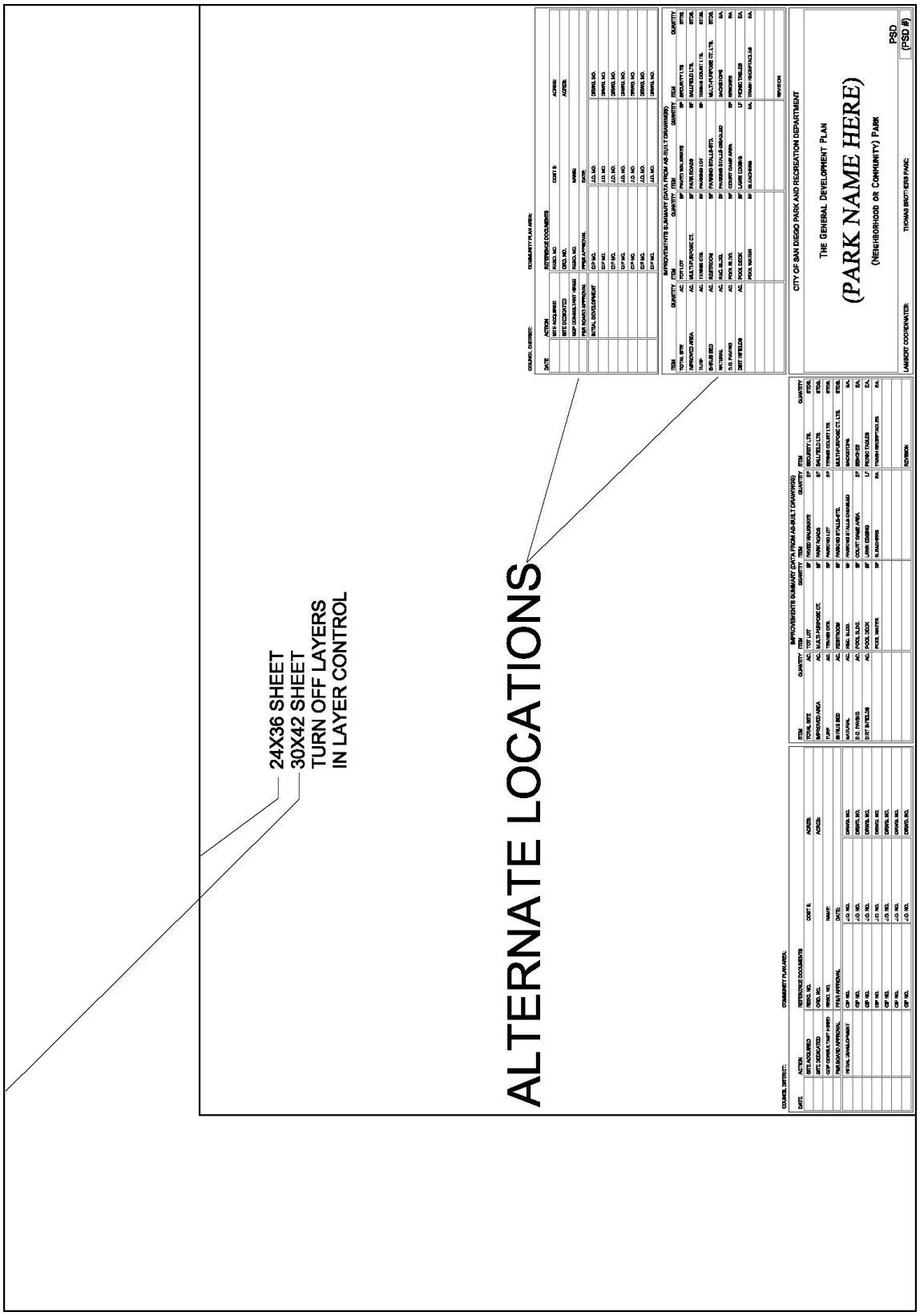

General Development Plan Border

General Development Plan Example

THE CITY OF SAN DIEGO • STATE OF CALIFORNIA •
SEMPER VIGILANS